LIBRARY

SOUTHEASTERN MASSACHUSETTS UNIVERSITY
· UNITATE · 1895 · FORTIOR ·

BY THE SAME AUTHOR

Crown 8vo. 6s.

THE PRINCIPLES OF WOOL-COMBING

OPINIONS OF THE PRESS

"Mr. Priestman speaks with authority, and is able to make good his positions as he goes on. And yet the book is nowhere polemical, and it is singularly free from 'padding.' **After we had read the book we handed it to an expert on whose judgment we can rely, and his verdict was, 'an excellent book, the best book on combing we have.'** And although much of it is so far technical as only to be fully understood by those who are acquainted with the terms and practice of combing, there is much of it that is within the grasp of all who are connected with the trade either as spinners, manufacturers, or merchants, and which is of the utmost import to them if they would only believe it. **The book ought immediately to be adopted as a text-book in all textile classes in the West Riding.**"—*Yorkshire Observer.*

"A Scientific Exposition. To the student the book is bound to be invaluable, and it will also enlighten many who, no doubt, at present think they have nothing to learn."—*Leeds Mercury.*

"Mr. Priestman writes with a thorough knowledge of the comb. We think the work will repay spinners, wool-sorters, and merchants who do not come into actual contact with the combing process, but are dependent upon it."—*Textile Manufacturer.*

"In his Preface the author says that he has endeavoured 'to formulate lines along which a man may think for himself,' and we must say that the endeavour has been fairly carried out."—*Textile Recorder.*

"A clear and well systematised exposition of the methods of an important industry, instructive alike in its teaching, its frequent descriptions of machinery, and its many excellent illustrations."—*Scotsman.*

"The volume is quite up-to-date, and should afford useful information to those in any way connected with the wool trade."—*Glasgow Evening News.*

LONDON: GEORGE BELL & SONS
PORTUGAL STREET, LINCOLN'S INN, W.C.

Digitized by the Internet Archive
in 2010 with funding from
Boston Library Consortium Member Libraries

http://www.archive.org/details/principlesofwors00prie

PRINCIPLES OF
WORSTED SPINNING

PRINCIPLES
OF
WORSTED SPINNING

BY
HOWARD PRIESTMAN
AUTHOR OF "PRINCIPLES OF WOOL-COMBING"

WITH DIAGRAMS

LONGMANS, GREEN, AND CO.
39 PATERNOSTER ROW, LONDON
NEW YORK AND BOMBAY
1906
All rights reserved

NB ~~2696~~
2196

TS 162.7
P8

PREFACE

THE object of this book is not to give a mass of data of a type that might be used in circumstances fixed by arbitrary rules, but to attempt to formulate the principles that underlie the many complicated processes involved in Worsted Spinning.

Data and full particulars of up-to-date machines are given for each process, but they are there to show how far the writer's theories may be made to fit with facts, as they exist. The figures as they stand are those suggested by Prince Smith & Sons. They may be taken as an illustration of the fact that in this book there has been no attempt to make existing practice fit with theory, unless it can be done consistently. No one must ever look upon the figures or the theories as things of any value in themselves, but only as a means by which all kinds of men with different equipment, different means, may reach a common end.

The value of all theories will be most to those who check each one by observation, on their own machines; for it is pointed out that those who prove that any well-accepted theory is quite incorrect will do themselves the greatest service, because they then will be in full position to avoid the errors of their neighbours.

If English worsted spinners wish to regain the lead that once was theirs, in every section of their industry, they must

SCIENCE LIBRARY

prepare to show more elasticity in their grasp of widely differing problems; and be prepared to treat each problem on its individual merits.

It is to simplify the work of those who take this view, that this book has been written; for, like its predecessor, it is a first attempt to shape new lines of thought, along which those who wish to do so may reason for themselves.

The dearth of earlier theoretic work, regarding such obscure and difficult subjects as drafts and doublings in the drawing process, has left the author no alternative, but to put down his own conclusions on this head, based on the observations of one man—himself. It may be that they are not all correct. It is his hope that other thinking workers will now take up the quest, and put the trade in full possession of the actual facts. In less obscure departments of the trade, the case for and against the various theories is stated with as little partiality as possible; and then as far as possible deductions made.

The greatest drawback to this system is quite obvious. In practice every well-known principle is overlapped by others, until the most important are hard to separate from those of lesser value; and therefore when a group is analyzed until each separate theory stands alone (as in this book), the values of the various theories may be seen in strong perspective or out of true proportion.

From force of circumstance, it must be always true that such a work as this is never quite complete; and from the fact that this is one man's single-handed work, it stands to reason that it must be marked by visible omissions. Of this, no one is ever likely to be more aware, than is the author. There is one answer only to the charge. The man who does not dare to write, until he feels his knowledge of his trade is quite

complete, will go on gathering information all his life, and end by never writing anything at all.

Quite a long list of semi-scientific problems have cropped up during the preparation of this book, that are not even mentioned, because they still await solution at the hands of scientific men.

Of these, the principal is that relating to the production and effects of static electricity; but in addition there are some involved problems that concern the trade, and they, as mentioned under their respective heads, await solution at the hands of practical men.

All illustrations must be looked upon not as scale drawings, but as diagrams. In many cases they are drawn to scale; but all are made to illustrate some point, or points; and structural detail has been therefore made subordinate to perspicuity.

The number of the wheels in every train is accurate in every case, showing the principle of every calculation; but in some cases where the number of teeth in various wheels made calculations complex, they have been simplified in cases where such alteration could be made without affecting any principle. And that the book may be of use to those who do not understand our ounces, inches, feet, drams, yards, and pounds, most calculations have been made in both the metric and our own systems.

For much important information of various kinds, as well as for all his particulars of drawing boxes and of spinning frames, the writer is indebted to Messrs. Prince Smith & Sons, who, with their usual courtesy, at no small trouble to themselves, have made out full particulars of all machines in the concise and very compact form in which they are presented under their respective heads.

These must in no case be confused with any of the calculations made from them. For those the writer is alone responsible.

To Messrs. Hall & Stells he also owes his thanks for information, as well as for the loan of various spindles and accessories from which six illustrations have been made, and for an illustration of their trap motion.

The firm of Messrs. Arundel & Co., of Stockport, were kind enough to send the necessary details of their patent winding frame; and Messrs. Lightowler and Keighley did the same regarding their extremely useful warping mill. The rollers illustrated in the Appendixes were kindly lent for the purpose by Messrs. Irvine Stott's Exors.

The following chapters contain only the barest reference to processes with which the writer is not personally acquainted. The firms here named are those with whom he was acquainted in his business days, and their machinery is therefore selected to illustrate the various processes, not because it is the only kind which does one type of work, but rather because its value and its various possibilities are well known to the author.

HOWARD PRIESTMAN.

June, 1906.

CONTENTS

CHAPTER		PAGE
I.	History	1
II.	Material and Qualities	24
III.	Spindle Theories	53
IV.	Drafting and Ratch	82
V.	Drawing	98
VI.	Cone Drawing	150
VII.	Spinning	167
VIII.	Dry Spun Yarns	209
IX.	Twisting	228
X.	Winding, Reeling, and Warping	244
XI.	Defects and Remedies	267
Appendix A.	Cone Drawing	305
„ B.	Cone Roving	311
„ C.	Pressing Rollers, Spools, Bobbins, etc.	317
Index		319

PRINCIPLES OF WORSTED SPINNING

CHAPTER I

HISTORY

THE history of spinning has been written so often and so thoroughly that there is little place for the purely historical part of it here; but it is probably worth while to point out the great antiquity of hand-spinning in all parts of the civilized and uncivilized world, and to show the relation of the different methods to one another, and their common relation to modern machinery.

One thing above all others must strike every investigator in this branch of knowledge; we go to the East to discover the earliest records, if not the earliest traces of the arts of spinning and weaving, and we find that when our ancestors in these islands were content to cover themselves partially with skins, and to dye their bodies with woad, the arts of spinning and weaving were so perfect in Egypt that textures were worn which can hardly be rivalled by the finest productions of modern looms. We know, for a fact, that the robes of the ancient Babylonians were the wonder of all who saw them, and recent investigators are inclined to think that the arts of spinning and weaving in Egypt were derived from the

earlier civilizations still further to the East. There is little doubt that in China and India these arts flourished to a similar extent, at least contemporary with those of Egypt, and if we go to India to-day we can see spinning and weaving under the same primitive conditions that existed in bygone centuries.

It is probable that we in Britain are indebted to the Romans for the introduction of cloth manufacture into our country, as we are indebted to them for many other arts, and here for many centuries, spinning and weaving dragged on an existence, in a condition little more advanced than in the countries of its origin. Perhaps nothing can show better the progress of this country, and the progress of the race, than the brains, which, within little more than a century, have evolved our modern industrial methods; for we are apt to forget that our great factories and all that they contain are developed from the germs that have lain dormant for more than two thousand years in the wooden spindle as it still is used in India.

As already stated, it is probable that the Chaldeans were the first people of whom we have any record, to use the arts of spinning and weaving. Records have been found which show that their cloths were of no mean quality, and it is probable that they were able to spin their wool and flax to fine counts, by the simple means at their disposal. In all probability they had nothing but the simple spindle, which was used in Egypt at a much later date, and probably, like the Egyptians, they weighted the head with a knob or whorle of gypsum, or other composition, to make it rotate longer. It is probable that the patriarchs of Bible history, coming as they did from Chaldea, were acquainted with the arts of

spinning and weaving. They probably dressed in fabrics of linen or wool, presumably the latter, because we know that the tending of flocks was their chief source of riches. It is not until after the exodus of the children of Israel from Egypt, that any record occurs in the Bible to show that they made cloth for their own use. They probably learnt the art from the Egyptians, for we have it on record in Exodus xxxv. 25, that "the women who were wise hearted did spin with their hands."

In the same way that the Israelites were ordered to discontinue most of the practices which they had learned in Egypt, we find in Leviticus xix. that they were forbidden to wear fabrics of woollen and linen mingled, and this proves conclusively that such fabrics were in general use at that period. It seems pretty clear that the manufacture of flax and wool flourished side by side in Egypt, and that similar apparatus were in use in both trades. If we may judge from the contempt in which the Egyptians held the pastoral Israelites, it is probable that they did not rear sheep for themselves, even for the sake of the wool they produced, and we may fairly conclude that the Egyptians first used, for spinning, the flax which grew naturally on the banks of the Nile—particularly as garments of fine linen would be very suitable for such a hot climate.

In his book on "Dress," Strutt tells us that linen and woollen garments were in use amongst the Egyptians at a very early age, so we may conclude that they early found that the long wool, which seems to be the natural product of uncultivated sheep, was suitable for spinning and weaving on their rudimentary appliances. It is probable that some method of straightening the wool would be necessary before

it could be spun, but they would naturally be acquainted with some kind of comb for personal use, and we may therefore fairly conclude that yarn of the nature of worsted was made long before any which resembled woollen yarn. There are four reasons for this :—

1. The wool was long;
2. And therefore easier to comb than to card.
3. The idea and practice of combing are simpler than those of carding.
4. The finishing of worsted cloth is simpler than the processes involved in felting and milling woollens.

The Greeks and Romans seldom wore cotton or linen cloths, and only adopted silk very sparingly for the most costly robes. Robertson tells us that both nations dressed almost entirely in wool, and that they used two very different types of fabric. One of them, called densa, strongly resembled our woollen cloths, being felted and having a nap on the face; whilst the other, called trita, was threadbare, and similar to our worsteds. A yarn made from shorter material and carded, must have been then in vogue for the heavier yarns and thicker cloths, whilst the older type, with longer, straighter fibre, was still being used for the finer textures and smoother surfaces. We may therefore consider that before the beginning of our era the spinning of combed wools existed as a branch of trade, distinct from the spinning and weaving of woollens.

No one can read through the history of industrial arts, either ancient or modern, without being struck by the way in which, again and again, processes have been invented simultaneously in different towns, countries, or even continents, and no more striking illustration of this fact can be cited than that revealed on the discovery of the New World. In

his history of Mexico, Clavigero shows that when the country was conquered by Pizarro in 1529, spinning and weaving had reached such a state of perfection that cloths of exceeding fineness were made in the country; in fact, so excellent were they that he concluded that the art of their manufacture must have flourished from remote antiquity. We have no reason to suppose that any intercourse had ever taken place between Europe and America prior to that date, with the single exception of the Northmen who crossed to Labrador by Greenland and Iceland in the tenth century. They gave in the Sagas far too clear a description of their visit, for us to suppose that they left any trace of their rude civilization when they quitted the country for good, a few years later. No one has ever been able to trace any connection between the Aztec races and their nearest Asiatic neighbours on the other side of the Pacific, and so we can only conclude that the spinning and weaving, in which they had become so proficient, were their own invention, with an entirely different origin to that which was practised in the Old World.

There is yet another instance of a very similar kind, showing that savage as well as civilized races have developed, if they have not originated, textile arts. In this case the proofs of originality are not quite conclusive, because we know that in very ancient times the Egyptians traded largely with the Carthaginians and Ethiopians; but, nevertheless, it was a great surprise to explorers and to scientists to find, when they first had access to the great Haussa city of northern Nigeria, Kano, which lies south of the Sahara, that modern native fabrics of excellent texture and original woven colour design, were in daily use amongst the people there.

Fragile and beautiful as are the Decca muslins of the

Hindoo hand-loom, there is no reason to suppose that the yarns for them were ever produced with any other apparatus than the wooden spindle, suspended from, and turned by, the fingers, just as it was four thousand years ago; and the only advance which has been made in India throughout that long course of ages, is the turning of the spindle by means of a rough and cumbrous wheel. No method of winding the thread automatically on to the spindle has ever been devised in the East. The continued use of such primitive tools draws our attention closely to the wonderful dexterity of the worker,

Fig. 1.

Fig. 2.

and we can only attribute the marvellous delicacy of his manipulation to generations of habit and of practice.

The very earliest records left to us of the nature of the spinning processes used by the ancients, come from drawings on the Egyptian monuments, in which we see that they used a simple spindle of wood or even of plaited rushes, with a head of gypsum to give it more momentum when spinning. It is a convincing testimony to the unchanging character of Eastern customs, that the very type of spindle, which has been found buried in the tombs of Thebes, is in use in Egypt to-day. The spindle is about 15 in. long, and from Fig. 1

it will be seen that no distaff was used by the spinner, the whole process being very elementary, although at that early date, there are figures shown, twisting two threads together to form a single folded yarn.

From that remote time to the beginning of the eighteenth century, there was no material improvement in the methods

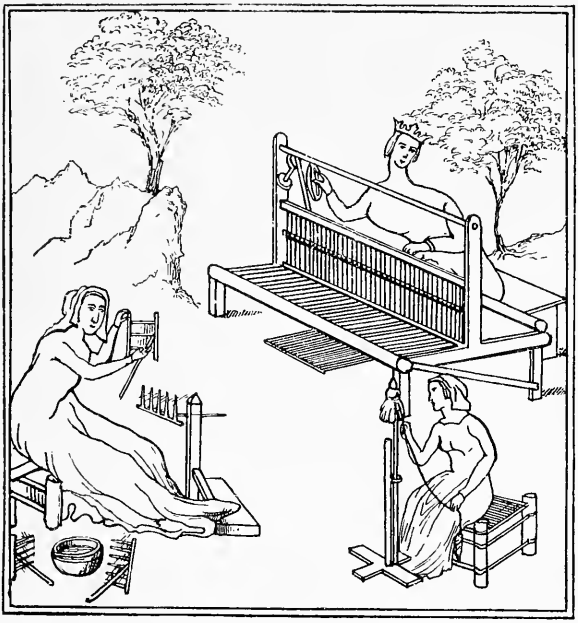

Fig. 3.

employed for spinning. Fig. 2 is a Grecian representation of a woman using a spindle and distaff, and though the beauty of drawing shows a wonderful improvement in the condition of art, very little advance had been made in the methods of spinning. In the rude pictures of Saxon times we find the first real step in advance. That step is the use of a fixed distaff, and those who know how to spin by hand will at

once realize how much more practical is the arrangement of the yarn and spindle in Fig. 3 than in Figs. 1 and 2.

After a most exhaustive search through all known sources of information, Mr. James was obliged to give it as his verdict, that the date and origin of the first one-thread wheel remained in obscurity, but he concluded that it has common origin with the rude teak wheel of Hindustan.

We know that in the seventeenth century, spinning on the Saxon wheel, Fig. 5, was a favourite occupation of the ladies of the time, and at the beginning of the eighteenth century three methods were in common use in this country.

1. The Rock, as the spindle and distaff were called.
2. The common one-thread wheel.
3. The Saxon, or treadle wheel.

(1) James thinks that the Rock was probably still in use in remote districts in England when he wrote in 1857, and it was principally used for worsteds. He says, "These Rock spinners drew out the thread from the end of a sliver of combed wool, and communicated the necessary motion to a rough kind of spindle, by twisting it between the right hand and the thigh, allowing the spindle to revolve when suspended by the thread, which the spinster gradually lengthened with her fingers. No just conception can be found of the delicate quality of the yarn produced by this primitive process."

It is well worthy of passing notice that although the Hindoos used a one-thread wheel for coarse descriptions of cotton yarn, yet for the finer sorts, the spindle, sometimes with and sometimes without the distaff, is employed, and thus full play is given to the delicacy of touch of the Hindoo women.

(2) The common one-thread wheel was used up to the end

of the eighteenth century for spinning wool (Fig. 4). This apparatus was neither more nor less than the loose spindle above mentioned, mounted in a frame, and driven or turned by a belt passing over a large wheel or rim. Thus the spinner's hands were left freer than by the former method, to draw out the thread. The main advantage of the one-thread wheel evidently arose from its capability of producing a larger quantity of yarn. Spinning by this rude implement,

Fig. 4.

still to be seen in many farmhouses in the north of England, is thus described : "The operator, usually a female, laid hold of the wool with the finger and thumb of the left hand at a few inches distant from the spindle and drew it towards her, whilst she turned the wheel with her right hand. She then twisted repeated portions, and as they were twisted, she, guiding the thread with her hand, wound it upon the spindle." This description is too obscure to convey any definite idea of the distaff in regard to the spindle, but it is clear that the

twisted yarn must be run on to the spindle, and therefore the first reference to the spinner taking hold of the wool a few inches from the spindle is difficult to understand properly.

(3) The Saxon, or "small" wheel is spoken of as being in use during the seventeenth and eighteenth centuries, and it contained two very important improvements upon the one-thread wheel.

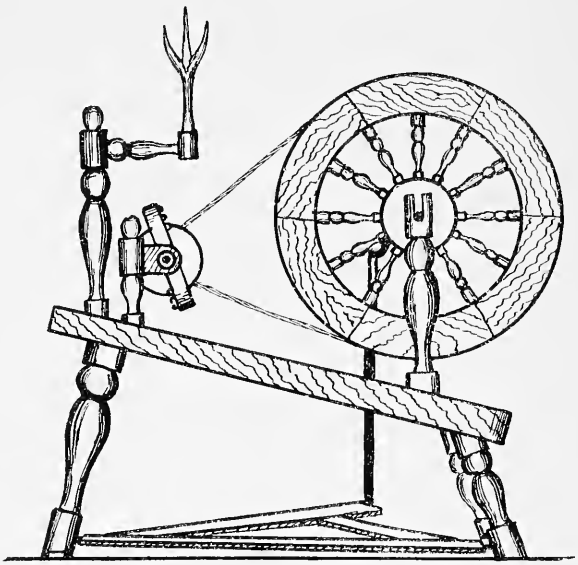

Fig. 5.

(*a*) The wheel received its motion from a treadle, so that both the operator's hands were free to draw the thread.

(*b*) The spindle was much more complicated. It carried a bobbin or spool, on to which the thread was wound by a flyer revolving with greater or less rapidity than the bobbin. The difference in the number of

revolutions between the flyer and the bobbin regulated the amount of thread wound on to the bobbin, and consequently regulated the turns of twist per inch in the yarn (see Fig. 5).

Curiously enough, these wheels seem to have been reserved almost entirely for spinning flax; but their interest to us is very great, because the arrangement of spindle, flyer, and bobbin were afterwards embodied in Arkwright's inventions. The only thing necessary to make a Saxon wheel into an automatic spinning frame, was some arrangement for drawing out the thread from the combed sliver.

It is worthy of the most careful consideration that the first patent to attain this end was taken out as early as the year 1687 by R. Dereham and R. Haines, ninety years before Arkwright entered his first claim. The wording in the patent index is very curious. The patentees claimed to have made "a spinning machine, whereby from six to one hundred spinners and upwards may be employed by the strength of one or two persons, to spin linen, or twisted thread, with such ease that a child of three or four years may do as much work as a child of seven or eight years, and others as much in two days as without this invention they can do in three days." Unfortunately, though Mr. Woodcroft made a very careful search at the patent office before 1853, he failed to find any vestige of specification beyond what is given above, and though it is supposed to have been a roller frame, there is no proof whatever to that effect.

The next patent was not taken out for sixty years, and although it was in the name of Mr. Paul of Birmingham, the invention was undoubtedly that of John Wyatt of Lichfield.

Writing in January, 1818, his son tells us that in 1730, or thereabouts, John Wyatt conceived the project of spinning by rollers, and in 1733 prepared a model about 2 ft. square, on which he spun thread in a room at Sutton Coldfield. Unfortunately, his means were inadequate to continue experiments, and he was imposed upon by Louis Paul, a foreigner, who contrived to obtain a patent for the invention in his own name. The specification shows that the inventor, Wyatt, had grasped the two great principles of spinning.

First, that of draft between two or more pairs of fixed rollers or cylinders, as he called them, such as are used in all worsted drawing and spinning machinery to-day.

Second, that of spindle draft, such as is adopted more or less in all mule spinning, and which is the root principle of the woollen mule. This he describes in a quaintly worded paragraph, and as spindle draft has a great bearing on some well-known defects in worsted spinning, it is worth while to draw attention to the first mention of it a hundred and sixty years ago. He says, " In some other cases, only the first pairs of rowlers, cilinders, or cones, are used, and then the bobbyn spole or quill upon which the thread, yarn, or worsted is spun, is so contrived as to draw faster than the first rowlers, cilinders, or cones give, and in such proportion as the first mass, rope or sliver is proposed to be diminished." There can be no doubt that this machine contained all the essential features of a modern fly-spinning frame, and Wyatt is therefore entitled to full credit for the invention of roller draft, unless some detail of Dereham and Haines patent can be unearthed.

Unfortunately, like almost all the great inventors, Wyatt received no reward for his unique ideas. He and Paul started a small spinning factory in Birmingham, where a

machine was attended by ten girls, but it proved a financial failure; he was defrauded by Paul, became a prisoner for debt, and died in comparative poverty.

A larger factory, moved by water power, was opened by a Mr. Cave, in Northampton, and ran until the year 1764. It is deserving of notice, not because it proved profitable, but because the principle of a positive drag was used on the frames.

In the description of the Saxon wheel, the separate drive of the bobbin and flyer are carefully noted in relation to twist, and in this first factory of any size it is interesting to read, "The establishment consisted of several frames of two hundred and fifty spindles and bobbins. The bobbins revolved upon the spindle, each being moved by a separate wheel and pinion." This is, of course, the principle upon which all cone drawing is made, and we shall have reason to refer to its inception in a later chapter.

In 1767, a man named Thomas Highs, a reed-maker of Leigh, made rollers for the purpose of spinning cotton, and in the great trial as to the validity of Arkwright's patents in 1785, Highs proved that he had used a machine with rollers; the front pair revolving five times the speed of the back pair. He also stated that he used it both to rove and to spin. This is, so far as we are aware, the first mention of any process coming between combing and spinning, and as worsted is distinguished by the numerous reductions through which it goes, in preparation for spinning proper, we may safely record this as another distinct step in the advance of the worsted trade. Thus, by 1767, we find that almost every principle involved in modern spinning machinery had been evolved, and if we can judge from James's history of the

worsted manufacture, there is little reason to doubt that Arkwright obtained knowledge of Highs's inventions from a man named Kay, a clockmaker, who had helped him to prepare his model, and that Kay afterwards prepared machines for Arkwright; in fact, Arkwright never denied that he had made unfair use of the information derived from Kay. At that time, 1768, Arkwright was very poor indeed, but a spirit merchant, named Smalley, found means for him to set up his first machines in a house next to the Grammar School at Preston, and after perfecting them there, Arkwright took out his first patent in 1769. His two chief contributions to the improvement of the frame were the use of fluted bottom rollers with leather covered pressing rollers, and instead of only using two pair of rollers, he made his machine with four pair; the two centre ones taking the place of what are now called carriers, or tumblers. In his second patent, 1775, he also introduced a single spindle stop motion, and the means to give a traverse to the bobbins. James says of this patent, "With the completion of Arkwright's spinning machine, a new epoch in the manufacturing history of this country commences. It occasioned a complete change in the old mode of manufacture, and rendered business transactions of a magnitude never before contemplated."

Many improvements were quickly added by other people. The present arrangement of driving, which is adopted in all worsted spinning frames, from a horizontal cylinder at right angles to the spindles, being early introduced. The name "throstle" was also given on account of the singing sound that these frames made when running, caused by the rotation of the numerous bands, wharles, and washers on the spindles.

James Hargreaves, who was a contemporary of Arkwright's,

was the Lancashire weaver who invented the spinning-jenny. He is said to have derived his idea from seeing the wheel and spindle of a one-thread wheel continue to revolve after it had been accidentally upset, and the idea of putting a number of spindles side by side, suddenly struck him. He did not use rollers, but employed spindle draft to draw out the thread to the required fineness. It is true that his machine was a very simple arrangement, but his was clearly an invention in the true meaning of the term, and as his principle forms the basis of all woollen spinning, it is worth while to quote Mr. James again, in order that the reader may form a clear idea of the difference between the two processes. "He put eight rovings in a row opposite to eight spindles, the rovings being joined to the spindles, passed between two horizontal bars of wood forming a clasp which opened and shut somewhat like a parallel ruler: when pressed together this clasp held the thread fast. A certain portion of the roving being extended from the spindles to the wooden clasp, the clasp was closed and drawn along the horizontal frame to a considerable distance from the spindles, by which the threads were lengthened out and reduced to the proper tenuity. This was done by the spinner's left hand, his right hand at the same time turned the wheel which caused the spindles to revolve rapidly, and thus the roving was spun into yarn. By returning the clasp to its first situation, and letting down a pressure-wire, the yarn was wound upon the spindle."

In this machine three essential parts of the modern mule appeared for the first time in a practical shape.

1. Spindle draft as mentioned by Wyatt.
2. A guide or pressure-wire to guide the yarn during the winding on to the spindle.

3. An arrangement to run the spindle at two differing speeds—

   (*a*) Fast, to put twist into the yarn, and

   (*b*) Slow, to wind the yarn on to the spindle.

The last important step in the history of spinning was taken by a Bolton weaver named Samuel Crompton. He invented the mule-jenny, so called because it contained the principles of Arkwright's drawing rollers together with the spindle arrangement of Hargreaves's jenny. It contained two distinct parts, the first being a system of drawing rollers fixed in a stationary frame, to reduce the roving previous to its being spun, and, second, a movable carriage furnished with twenty to thirty spindles to further draw out, and then twist the yarn. A contemporary says—

"The rovings being passed through the rollers and attached to the spindles, the machine was then set in motion. The rollers then elongated the rovings, and the movable carriage receding from the rollers continued to draw it out, adding at the same time a slight twist. When a sufficient quantity had been given out, the rollers, by a contrivance, were at once stopped, and they then acted the part of the clasp in the jenny, holding the rovings whilst the carriage still receded from the rollers, but at a much less speed. The velocity of the spindles was increased to nearly double, thus drawing out and twisting the thread in the most equal manner."

The essential feature of the mule was the movable carriage in which the spindles were set and revolved. It was arranged in such a way that whilst the spindles revolved they also receded from the rollers, which took the place of the clasp in the Hargreaves jenny. It differed chiefly from Hargreaves's

jenny because in that machine, the clasp moved away from the spindles, the spindles being stationary.

Crompton began experimenting in 1774, and at first he aimed merely at producing a yarn for the requirements of his own family, and he endeavoured to keep his mule a secret. He was afraid of the public indignation, which ran very high at that time against all kinds of automatic machinery; but his system produced a finer and evener yarn than was possible either on Arkwright's frame or on the jenny, and the quality of the yarn he produced excited the attention of the neighbours, who finally discovered the construction of his machine. However, he took no steps to secure a patent for his invention, and the principle of the mule became public property. As it came from Crompton's hands, it was a clumsy wooden machine. It was, however, much improved soon after it was made public by many ingenious men, and was rendered capable of working with several hundred spindles. It was early applied to spinning worsted, and after being disused for a long period it was again employed, to some extent, in 1853 in spinning peculiar qualities of worsted yarn. It has long been largely used by the French for spinning worsted, and unquestionably the excellent qualities of some of their stuffs are attributable to this cause. Even as long as fifty years ago, James wrote: "To me it is astonishing that the improved mule, so admirably adapted for producing the finest sorts of worsteds, should have been so neglected in this country, even with the example of our nearest neighbours before our eyes, and continually hearing the beauty and fineness of their stuffs praised."

The history of the long series of inventions, which made it possible to spin by purely automatic machines, is really complete at this date, 1780; but there are two more recent

inventions which are worthy of mention here, because they are in daily use in almost every mill in Yorkshire. One of them made it possible almost to double the output of the worsted fly frames which were in use prior to 1833, and the second is one of the most important arrangements now in use, for securing a level sliver, and, consequently, a level thread.

In the year 1818 an extra process, known as "slubbing," was introduced, and by its means, twist was put into the open sliver, which until that time had been used without any twist, prior to spinning. About the same date, the size of the spinning rollers was altered to suit the shorter kind of wool, now coming into vogue, and the position of the spindles was altered in regard to the rollers, so that twist could run more perfectly and uniformly into the thread.

It was not until 1831 that the American or dead spindle was first introduced, and from that time, cap and ring yarns were possible. The use of the cap admitted of greatly increased spindle speed, and soon created quite a revolution in the construction of the frames, as well as a great reduction in the cost of producing fine counts from merino qualities.

With the exception of combing machines, which were made practical in the forties, probably nothing tended more to the regularity of the sliver in drawing and spinning than did the introduction of gilling. In 1834 Mr. Fairburn, of Leeds, took out a patent for a screw gill, and the use of this device in the preparation of slivers for slubbing, has enabled the spinner to turn out much leveller yarn.

Up to this point we have considered nothing but such inventions as relate purely to spinning machinery, but it is seldom the case that one group of circumstances is responsible for a great industrial development, and the factory system

could never have grown to its present state of perfection without the aid of steam.

Watt's invention of the steam-engine in 1782, and its development until the year 1789, affected the spinning industry, possibly more than any other trade in the country. To realize the change which has taken place, we must consider the methods by which business was conducted in days prior to the introduction of steam. In the first place, it must be remembered that in the early days spinning was done entirely at home, being practised by the women and children, and the buzz of their spindles was often heard in the same house as the clank of the shuttle in the loom; the looms being more often worked by men. About 1775, when the one-thread wheel was still in general use, the output of yarn by each person was so small, that manufacturers in the towns found difficulty in obtaining sufficient yarn for their weavers, who usually worked on commission, and the inhabitants of the most remote villages were visited by the manufacturer, and supplied with wool to spin on commission. The care and the trouble involved by all this transport, are simply incredible in these days of factories and railways. Two examples will be sufficient to illustrate the point.

In 1775 the wool was often taken from York, where it was sold, on packhorses, over the very worst roads, to Askwith, near Otley, and after it had been combed there, it was again sent on packhorses to the dales of Cheshire and Derbyshire, going through Bradford and Huddersfield on its way to be spun. It made a third journey back to Askwith to be woven, and in the form of woven goods it went again on horseback all the way to Colne to be sold. After the opening of the Leeds and Liverpool Canal we find things are somewhat

simplified. One writer says: "We sent a pack of tops at once to Skipton by canal. A boat came on purpose for the tops of various people. The pack was generally consigned to a shopkeeper or small farmer, the former oftenest, because it brought custom to his shop. He had a halfpenny a pound for putting it out. We had spinning done in Lancashire as far as Ormskirk, in Craven, at Kirkby Lonsdale, in Wensleydale, Swaledale, and other parts of North Yorkshire. Much difficulty was experienced with the yarn; we had to sort it, and from the same top there would be counts as thick as 16^s and as small as 24^s, showing the difference in spinners. For a pound of 20^s we gave on an average from ninepence to a shilling, and a good spinner, from Monday morning to Saturday night, might earn two and sixpence a week." In addition to all the other difficulties under which business was transacted, the wool buyer had to traverse the country along wretched roads, which were infested by such bold highwaymen as Turpin, and a host of less notorious characters.

The scarcity of yarn no doubt hastened the introduction of automatic machinery; but prior to the invention of the steam-engine, this caused very little saving of carriage, because the factories were necessarily placed in out-of-the-way valleys where there was the necessary water power; for example, on the upper reaches of the river Aire above Bellbusk, and at Westend in the Washburn Valley three miles above Blubber Houses. Doubtless the remoteness of these early factories is one reason that improvements in machinery spread so slowly at first; for when once such a place had been equipped and started, it would be a matter of very serious expense to make any further alterations to the machinery. The introduction of steam power at once made for centralization, and the

coal-bearing districts quickly became the principal centres of industry. At first, of course, the water-driven mills, were able to compete with steam-driven factories, because, although the rents were not yet high in the towns, the engines were still so imperfect that they used a great deal of coal. Prior to 1800, carriage to Bradford from York would probably be almost as difficult and costly as to the Upper Washburn Valley; but roads, to what are now the manufacturing districts, were greatly improved early in the nineteenth century, and when the cost of carriage to the towns was still further reduced by the advent of railways, the doom of the country mills was sealed.

Wherever a railway appeared the cost of carriage fell so much that the amount of money saved in coal, by water-driven mills, was no adequate compensation for the extra cost of transport, and now almost all mills in country places, which lie away from a railway, are empty. Only the ancient buildings, with rotten floors and bending roofs, remain as a monument of what industry was in the age before steam power.

So far as can be ascertained, the first worsted mill in the north of England was built on the Duke of Hamilton's Dolphin estate in 1784, but it was fitted with such crude machinery that it did not prove a commercial success, and was closed in 1791. In 1787 John Cuncliffe and John Cockshot purchased a piece of land at Addingham, and commenced to build a weir across the river Wharfe, where the low mill now stands. This was the first factory from which yarn was sold on the Bradford market, and as it is still in full work it is worthy of notice that it never shared the fate of the majority of the country mills. The first spinning factory within the

parish of Bradford was built in the deep and narrow valley of Hewinden in 1792, and another mill is said to have been built in the same year at Ilkley, but all traces of the latter building have long since disappeared.

The first spinning machines to be set up in Bradford were erected in the Paper Hall, by Mr. James Garnett of Bradford in 1794, and for more than a century the same industry was followed by his sons, grandsons, and great-grandchildren. It was not until 1800 that the first spinning mill was built on the Holme, amid a feeling of the strongest antagonism from the inhabitants of Bradford; for at that time factories and the factory system were held in intense dislike by all the working classes, and no one then realized that the despised machinery would be able to alter the condition of Bradford—which was then a mere village—into the flourishing and important city which it is at the present time.

Although the steam-engine was comparatively perfect by 1800, we do not hear of any great advance in the methods employed in spinning until the year 1815. Every one was too much concerned in the results of the great Napoleonic wars to show excessive interest in trade; but when the long campaign was closed by the battle of Waterloo in 1815, the devastated countries of the Continent were in no position to supply their own needs, and we were in a splendid condition to turn our attention to reforms and improvements in carriage and in factory methods. The year 1818 is often given as a period of transition from the old order to a new, but it is probable that improvements had been more or less continuous all through the intervening years, although it is doubtless true that the brighter prospects of peace and trade brought them into much more general use.

In the following list important improvements are tabulated, together with the earliest dates at which they are known to have been used, and nothing can show more clearly the improvements in the nation's thinking-power than does the wonderful advance which has taken place in the last hundred and sixty years. When we consider that almost every one of these improvements has been made, not by scientists or trained men, but by men from the ranks, there is every reason to hope that the advance is not yet ended.

? First record of the use of a spindle.

520 B.C. First record of the use of a distaff and spindle.

1200 A.D. First record of the use of a fixed distaff and spindle.

1600 (or earlier). One-thread wheel.

1630. Saxon wheel with flyer spindle.

1687. First automatic frame of Dereham and Haines.

1730. First roller draft spinning machine by Wyatt.

1730. First spindle draft mentioned by Wyatt.

1744. First frames having positive drag, by Highs.

1769. Arkwright's improved frame.

1780. Hargreaves's jenny with vertical spindles and spindle draft.

1774–1779. Crompton's mule with roller draft, and spindles in a moving carriage.

1818. Improvements in build of frames.

1831. Cap spindle—an American invention.

1834. Screw gills, by Fairburn of Leeds.

1828. Ring spinning.

CHAPTER II

MATERIAL AND QUALITIES

THE relation of worsted to woollen goods is still so much of a mystery to the general public that it is a very common thing for any one, in either trade, to be asked what is the essential difference between the two. There is only one answer which is really concise, and at the same time fairly accurate. It is that "worsteds are combed, woollens are not," but the two processes differ very widely in other respects. The difference in the number of operations through which the wool goes being perhaps the most noticeable feature of contrast between the two. For example, after washing, material for a woollen cloth goes through one, two, or three carding processes, and from the last of them it is *all* taken direct to the spinning machine to be made into yarns.

Worsteds, on the other hand, go through many more processes. The shorter qualities, which are carded, go through eighteen operations between the washing and the spinning, and long prepared sorts may go through twenty or twenty-one operations, in one of which some proportion of the shorter fibres is always removed, together with most of the knots, so that the *average* length of the fibres is increased and the yarn made to lie straighter and smoother. This is simply another way of saying, that in worsteds every fibre is kept as long and

straight as possible, that the yarn may be bright, and smooth, and as level as possible.

In regard to woollens it was shown in "Principles of Wool-combing" that the natural inclination of the wool to curl and contract is accentuated by the nature of every process in the industry, because bulk in regard to weight is of more importance than the evenness and regularity which is expected in worsted yarns.

Circumstances naturally arise sometimes, which make it necessary to put uncombed wool through a worsted drawing, in order to produce a yarn for some special purpose. This is quite common in the carpet trade, where the characteristics of a worsted yarn are wanted, at prices so low that combing (which means the removal of noil) must be omitted, so that every available fibre may go into the yarn, and keep the cost down to the very lowest limit possible.

Such a yarn would resemble a worsted more than a woollen thread, because the long straight fibres and the numerous drawing processes would give a fairly smooth and compact yarn, with fibres more or less parallel with one another, but at the same time the quantity of short wool which was left in the thread would affect its evenness, and probably appear as larger or smaller lumps at irregular intervals along the thread.

We may take this as an illustration of the principle which underlies the selection of wool for every class of yarn.

It may safely be stated, as an axiom, that *the suitability of material for any class of yarn depends on the relation of its price, to the length and quality of the fibre.*

A top might have the required length and come in at a reasonable price, but if the quality were not right it could not possibly be used. If a crossbred were too fine in quality it

would be rejected because the cloth would look too flannelly, and would lack the necessary crispness of handle; but complaints that the quality is too low are, of course, much more common. When this is the case, the required counts cannot be evenly spun, and the cloth will be too rough and harsh to the touch. There would also probably be other more technical difficulties, which will be dealt with under special headings.

It is also clear that if the quality and length of a top were right, and the price too high, the feel and appearance of the fabric would be good, but the price would be so high as to prevent all chance of selling it.

In the following classification of materials for the different trades, the question of price will not be considered, because it varies so greatly from day to day; but, in spite of this omission, the student must never forget that price is now an item of such immense importance that it often takes precedence over all other considerations, quality and length included.

Unfortunately, there is such confusion in the terms used to denote the properties of wool and its suitability for any class of work, that the meaning of several words must be clearly indicated, and some of the definitions given in the last chapter of "Principles of Wool-combing" will therefore be summarized here.

1. "Length" must always be regarded as a purely relative term, for it must be clear to every reader, that length which would be excessive in a 60^s quality would be so short that a 40^s quality, with fibres of the same length, would not spin to more than 15^s counts.

2. "Quality" is much more difficult to define. To begin

with, the word has two entirely different meanings. If we say that a top must have the "qualities" necessary for an Italian cloth, we mean that the length, quality, and diameter of the fibres must be suitable, and also that they must be sound, and have the necessary property of "filling" or "covering" when the cloth is finished. When the word "quality" is used to convey this meaning, the word "property" ought always to be used instead of it, and quality should be reserved to indicate only fineness or diameter of fibre. For every quality number there is a definite diameter of fibre, which is recognized as the standard for that quality.

Length and quality are both necessary to spin any given count, but the word "quality" has come to refer so entirely to diameter of fibre, that even if the fibres of a top be small enough in diameter to spin to 60^s counts, although they are so short that they will only spin to 30^s in practice, the top would still be spoken of as a 60^s quality.

Worsted yarns may be classified under ten heads—

I. Super botany single weft yarns.
II. Cashmere weft yarns.
III. Botany coating warp and weft yarns.
IV. Thick coating weft yarns.
V. Hosiery yarns.
VI. Fine crossbred warp and weft.
VII. Low crossbred warp and weft.
VIII. Lustre and demi-lustre.
IX. Mohair and alpacca.
X. Carpet yarns.

Each of these numerous classes differs in some essential from all the others, but each of them contains so many different grades, that each class *appears* to merge more or less with

its neighbours, because the finest grade of, say, No. 2 may be finer than the lowest grade of No. 1.

It does not follow at all that the finest grade of No. 2 would do to use instead of a similar quality in Class I.; for, though the quality and length of fibre may be equal, there are other attributes, such as serrations, waviness, and strength, which play a most important part in the nature of the finish which the yarn will take when it is woven and dyed.

Class I. Super botany single weft yarns.—A, such as are used for wefting the finest silk warp cashmeres (Henrietta cloths), and B, the best Italian yarns, are both made from the finest and best-grown Australian wool.

Probably no finer yarns have ever been spun from pure wool than those made for the silk warp cashmere trade, between the years 1885 and 1895. 160^s counts were spun and sold by at least one Bradford firm, and one or two manufacturers also spun equally fine yarns for their own use. When one considers that there are more than fifty-one miles of yarn in a single pound, it is very clear that the fibres used must be of extraordinary fineness to spin such yarns at all, or to spin any yarn above 100^s counts, with any approach to regularity. In addition to being very fine in quality, the fibres must be very supple and very sound; they must all be of nearly uniform length, and they must have serrations sufficient to make them adhere to one another without giving any feeling of roughness.

In short, all the qualities necessary for spinning must be present in a marked degree: the properties which make for good finishing being less important, for it is quite clear that yarns spun to such excessively fine counts, are not often

required to "cover" much, and as it is necessary to put an immense number of turns into these very fine counts, the twist would always prevent their swelling in the fabric, even if the wool possessed all the attributes which make the fibres spread over the face of a cloth when finished. In fabrics like nuns veiling, for instance, both weft and warp threads must always remain separate and distinct after dyeing and finishing, in order that the texture may be more or less transparent, and nothing can secure this end so certainly as a sufficient number of turns of twist per inch.

Unfortunately, the wool necessary to spin 160^s is now no longer grown. "S. Wilson Ercildoune" was the only mark from which wool could ever be sorted to do it satisfactorily; the same grower's "Mount Bute" being very nearly as good. Prices as high as 5*s.* were paid in the year 1880 for bales of selected fleeces; but even this extraordinary price was not sufficient to repay the grower for the care he expended in keeping his flock up to such a high pitch of perfection, and it would be difficult at the present time to find any wool which would spin higher than 120^s counts.

B. Yarns for Italian cloths (worsted sateen cloths with cotton warp) have several characteristics in common with Class I., A., but for the most part, they are much lower in quality. They are sometimes spun as far as $^1/100^s$, and not unusually to $^1/90^s$, but $^1/80^s$ may be taken as the top counts which can be relied upon in ordinary ranges, and $^1/70^s$, $^1/64^s$, and $^1/60^s$ are the counts most largely used.

The nature of all cloths, naturally decides the type of yarn necessary for them, and when we consider that the weft in an Italian cloth floats over at least four warp ends, for every end which it goes under, it is clear that—

1. The face of the cloth will be composed almost entirely of weft yarn.
2. That any unevenness or irregularity in the weft will therefore show very plainly.
3. In practice the weft in this class of fabric is intended to hide the warp entirely, and it is therefore essential that the yarn should not only be very uniform, but that it should also "burst" or spread in the finishing process, so that no sign of the warp threads may be visible on the face of the cloth.

Long experience has shown that for this purpose, a yarn which is spun out, can never rank in comparison with one which is spun down. That is to say, if a 60^s quality is spun to 64^s counts, it will not make so satisfactory a piece, *in relation to price*, as a $^1/60^s$ spun from a 64^s quality, even if there were 64 picks per inch of the 64^s counts, and only 60 picks per inch of the 60^s counts. In the first place, the 60^s spun out of 64^s quality will be the more level of the two, and will make the face of the cloth look smoother and evener.

Apart from the smaller number of fibres present in every thread of the finer yarn, it is clear that more twist will be required to make it equal in strength to the 60^s, and as twist always prevents the yarn from swelling, and the fibres from separating in the finishing processes, it is clear that a 64^s thread from a 60^s quality will not cover as well, as would 60^s counts. If there were the same number of picks in both cases, it is clear that the cloth made from 64^s counts contains $\frac{4}{60}$, or 6·6 per cent. less material than a similar cloth made from 60^s, and in appearance it might be inferior by fully 10 per cent. If it be taken as an axiom, that a yarn composed of many fibres will cover better than one which

contains fewer, it must be clear, without demonstration, that cloths where cover is important should never be made from "spun out yarns." That is to say, if 64^s and 70^s counts are wanted they should be spun from such qualities, that proportionate twist will make them proportionately strong. For example, if a 60^s quality will spin 60^s counts of a certain strength, with ten turns per inch, 66^s counts should be spun from fibre which would give one-tenth less strength with eleven turns per inch. This rule ought to hold good of all yarns and all cloths; but in cashmeres and all commoner fabrics, it is often possible to save money by spinning a 64^s counts from a long 60^s quality, whereas in Italian yarns it is not at all certain that any final saving would result. The cost of the yarn would naturally be reduced, but at the same time the quality of the cloth would be reduced out of proportion to the amount saved.

The severity of the processes through which Italian cloths go in finishing must also be considered in selecting materials for this trade, for whilst some wools are fine enough to spin the requisite counts with the requisite twist, they may have been grown in such a way that they will not resist the heat and pressure of finishing, as well as other sounder wools; and cloths made from wool of this kind would be flat and lifeless after finishing, as compared with similar cloths made from sounder wool.

Opinions differ very widely as to the possibility of selecting suitable wools by sight and touch alone. Certain classes can of course be rejected as wholly unsuitable; but amongst the very best grown wools, great differences of finish appear without apparent adequate reason. To what this subtle difference is due is not quite clear, but it is probable that very

thorough microscopic and chemical research would disclose some reason. The safest way to select wool for super Italian yarns, is by experimental lots. Experiments have pretty clearly proved that if wool from one district or station is right at one time, it is fairly certain to continue suitable, and we may conclude that suitable climate, soil, and feed are not only necessary to produce suitable wool, but we may also conclude that they will be efficacious in maintaining the wool from any flock at a uniform level, if the breed is maintained at its original standard.

This effect of climate and locality make it especially necessary for makers of Italian yarns to know exactly what marks their tops contain, and as it is quite unusual for top makers to tell their customers what marks they use, almost all the best spinners of Italian yarns, are firms who buy and comb their own wool, that they may know exactly what marks are going into each of their different qualities of yarn. Fortunately, there are now top makers who will show their wool to their customers before it is combed, making no secret of the styles, classes, and marks which every pile contains, and by their very honesty, these firms have enabled spinners who do not comb, to make their yarns from the most suitable marks to the mutual advantage of both parties.

The requisites for an Italian yarn may be briefly summarized under two heads—

1. It is important that every property of wool which conduces to good spinning should be present, so that the yarn may be level and strong without containing much twist.
2. But the properties which make the yarn suitable to take a smooth and regular finish are more important

still. This means that suppleness and fulness of fibre are an absolute necessity, and anything which can be done to the top in the combing process, to keep the fibres at their full original length, and full of their original constituents, so that the tops have length, quality, suppleness, and bloom, is of more value in this trade than probably in any other. For example, a super greasy double-combed top would make a very good cloth, but for almost all practical purposes it would be too expensive, and therefore its soundness, suppleness, fulness, and straightness must be imitated as far as is possible by cheaper methods.

Class II.—Cashmere and other single weft yarns are made from almost every variety of wool which will spin to the requisite counts, and as the range of counts extends from 50^s to 100^s, it is easy to see that the range of qualities will be a very wide one. For all counts above 70^s it is unlikely that any wool could be found to spin the counts, which would not be sound and fine enough to be suitable for Class I., A. Such qualities would consist principally of super Australian, New Zealand, and Tasmanian greasies, because, as has been stated before, greasies usually spin better and are more supple than an equally fine quality of scoured wool. From 80^s down to 70^s the best scoured marks could be introduced, but as they almost always produce rather shorter tops, the cost of spinning a blend of scoured and greasy would probably be a little more than for spinning greasy alone, because of the twist necessary to make a strong thread from the shorter top. The finest scoureds are also very suitable for use in the super woollen trade, and at times they fetch such high

prices that there can be no saving in using them for worsted botanies.

In everyday use, the term Cashmere yarn is understood to mean one of 60^s quality spun to 60^s or 64^s counts suitable for ordinary dress goods, but not necessarily capable of taking a good Italian finish. An immense trade is done in yarns of this class. They can, of course, be made by people who do not make their own tops, and have no specialized knowledge of wool; but as they go into all classes of goods, the spinner should take care never to give any guarantee, direct or implied, with any yarn spun out as far as the quality will go.

It very often happens that fineness or smallness in the size of the yarn may be of considerable saving to the manufacturer, quite apart from questions of quality, and the spinner will often find himself pressed to make, say, 64^s counts from a quality which will only spin nicely to 60^s. In such a case the economy to the user, would be the very reverse to the maker, and the yarn might be so uneven that the spinner would also lay himself open to claims for irregularity.

The spinner's liability to claims is greatly increased by wide variety of weaves for which cashmere yarns are used. For example, in a warp face cloth, an irregular weft yarn would do the least possible damage, because it is almost entirely hidden by the warp threads. In a 2 × 2 twill, or any other weave in which warp and weft come alternately and equally on to the face of the cloth, streakiness in the weft does not show badly, because every pick is frequently crossed by warp threads, which break up the unevenness, and hide half the total length of weft in the piece; but it is very different with a weft face cloth like an Italian, where no warp is visible, and the weft threads appear to run

uninterruptedly from selvage to selvage. In such a cloth inequalities naturally show very plainly, and, therefore, before taking any risk the spinner ought to know approximately to what purpose his yarns are to be put.

Probably there is no term in the whole range of the textile industries which carries meanings, so many and so varied as does the word Cashmere. It is, of course, the name of a large and mountainous State in the north-west of India, famous to us, because its deep and rugged valleys are the native place of the wool-bearing goat which takes the country's name. These animals are nearly allied to the goat of Tibet, and their hair greatly resembles that of the Angora goat, which is known to us as mohair. The fleeces of Cashmere goats vary very greatly in length and quality, some fibres being 18 in. long and very coarse, whilst a very small portion of every fleece, perhaps only 3 or 4 ozs., is so soft that it is of very great value. The natives are strictly forbidden to export the goats which produce it, and nearly all of it is used in making the world-famed Cashmere shawls.

Until the year 1857, at least, the word Cashmere never seems to have been used for any kind of cloth manufactured in this country; but cotton dress goods, under the name of Mousselaine-de-laine, were woven in the Colne Valley as early as 1837. It is probable that the term was first used in the dress trade, to designate fine twilled cloths made from real cashmere wool, but as the tops are exceedingly difficult to obtain in quantity, the cloths are too expensive to be popular. Merino was first substituted, and then woven into cotton warps, in similar weaves, to make a cheap imitation of the original cloth, which continued to be sold under the old name. Whether this is, or is not, the

true derivation, the fact remains, that the term is now used in Bradford and district to denote a special type of twilled dress goods, with cotton warp and merino (Botany) worsted weft. If the same type of cloth is made with silk or worsted warps, it would be called respectively silk warp cashmere, or all wool cashmere. The yarns most suitable for making cloths of these three types are known as cashmere yarns. They are single yarns, delivered on spool, and made from merino or botany qualities. In other parts of the country cashmere is used to describe widely different kinds of yarn. For instance, in Leicester it refers to mule-spun yarn, whether made from Crossbred or Botany.

The terms Botany and Merino, here used to describe cashmere, carry so little of their original meaning that they, in turn, need definition. Merino is now the term used for all fine-fibred wool of sheep descended from the original Spanish merino breed. A large proportion of the total supply comes from Australia and New Zealand, but the Argentine, Patagonia, and South Africa also send their quota, whilst Spain, which was the original home of the breed, cannot now be looked upon as a source of supply at all.

The two terms Botany and Merino are almost identical, but the former has now much the wider application of the two. It was, of course, derived from Botany Bay, of evil reputation, and ought, therefore, to apply to all wool coming from Australia; but because all Australian wool was for many years pure merino, the two terms became in time synonymous. So much was this the case, that when other breeds of sheep with stronger hair were introduced into the country, they were always distinguished as crossbred,

and crossbred they still remain, Botany being generally used of merino wool from any country which is over 50^s quality. Botany does not, therefore, mean Australian, or Australasian; for Cape wools are now so good, that many marks are quite suitable to spin alone to 60^s and 64^s; but South America also contributes no small share to the long list of materials which are used for cashmere yarns. Very often they are all classed under one head, and Botany is now used to cover all qualities that are neither crossbred nor English, and it can now only be considered as a generic term for all fine-fibred wool, resembling merino.

Any attempt to give an idea of the variety of blends which are daily made and sold, would be a task as impossible as it would be useless, for it must be borne in mind that in cashmere yarns, price plays a far more important part than it does in Class I., and a good top at a farthing a pound above the market rate would often be left in favour of a relatively inferior article at, say, one farthing less.

Spinners often carry this practice much too far, for, as is shown in a later chapter, a poor top may easily cost an extra farthing a pound in drawing wages, and it is nearly certain to require more twist in the spinning. Now, the cost of spinning always varies in direct relation to the number of turns put into the yarn, and it is therefore very easy to see that an inferior top will cost more to spin, quite irrespective of the quality of the yarn produced. The machinery necessary for cashmere yarns would strongly resemble that used for Class I.

Class III.—Botany coating yarns have many properties in common with both the foregoing classes, and the point in which they differ most visibly is that they are spun into both

single and twofold, and must have the properties necessary to make a good warp. The finish required on both weft and warp will, of course, be the same; but the fact that the warp must always be strong enough to weave well, without excessive twist, makes it necessary that the fibres for the warp should be sound and of good length, even for cloths where a shorter and cheaper wool would give the required finish.

For very superior coatings, such as are used to make frock-coats and gentlemen's evening dress, it is necessary to use the best qualities of Class I. in order to get the desired softness and finish. Other qualities from Class I. would be used for other special purposes, but the price paid for the majority of coating yarns will not permit the spinner to use such specially selected wool, and the better qualities of Class II. are in much more general use for coating yarns.

The type of yarn necessary also depends very largely on the nature of the weave employed in the cloth. For example, in Soleils (a type of light coating or heavy dress cloth in vogue two or three years ago) no weft appears on the face, and there is therefore nothing to break the effect of any irregularity in the warp, and all thin or thick places show so plainly, that a very even yarn is an absolute necessity. The warp is often $^{2}/60^{s}$ or $^{2}/64^{s}$, and in order that it shall be fine and fairly strong, without excessive twist, it is often necessary to use a more expensive quality than would be necessary for a cloth where weft and warp appear equally on the face. On the other hand, the single weft is fairly thick, and as it all goes to the back of the piece, it can often be made from shorter stapled wool, which has the necessary softness.

For weft-faced cloths the very reverse is, of course, the

case. The warp must be sound and not too hard, but where a suitable sound top of good length can be found at a reasonable price, it can very often be used, and a slight saving effected; but the face-weft will have to be of good quality to give softness, and at the same time it must be even, and have good covering properties, as in yarns for Italian cloths.

In the great majority of coatings, however, weft and warp appear in fairly equal proportions on the face and back alternately, and whenever this is the case the quality of both should be very nearly alike. When twofold yarns are used for both weft and warp they are nearly always made from the same tops; they always ought to be so.

Where weft is single, and warp twofold it is much better to have them from the same material, but some manufacturers insist on having single weft, at a so much lower price than the twofold warp, that the difference cannot possibly be saved in spinning and twisting, and the spinner is driven to use a separate blend of equal quality, but not of so great length, for the weft. It is also shown in Chapter V. that when large orders are given for thick single weft, say $^{1}/24^{s}$, and twofold warp, say $^{2}/54^{s}$ or $^{2}/60^{s}$, the spinner can save money even where both weft and warp are made from exactly the same material, by putting one lot of tops through a drawing on purpose for the $^{1}/24^{s}$, and another part of the same lot through a set of drawing differently arranged for the $^{2}/54^{s}$ or $^{2}/60^{s}$, because the thick counts can be made perfectly level without going through as many processes as are necessary for the $^{2}/60^{s}$.

All these remarks apply equally to white or coloured yarns, but colours are very seldom ordered in such quantities

that separate drawings can profitably be put in for warp and weft.

Spinners should also never forget that there are two types of finish always in vogue:—

1. That in which the fibres are left on the face of the cloth, so that it has some resemblance to a woollen; in it slight yarn defects, or mended places show very little. Generally this finish is simply the result of scouring and dyeing processes, but sometimes it is heightened by a slight milling, and still more seldom by a mechanical raising of the fibres on the face of the cloth. The more the fibre is raised, the less liable are faults to show after finishing.

2. In the finish, which is most typical of worsted goods, every fibre is cut from the face of the fabric so that it is left bright and clear, with every thread of the colour pattern and every lift of the weave showing distinctly.

Naturally, in cloths like this, every yarn defect will show all too plainly, and a yarn which may make a perfect piece with a raised finish, may not only be unsuitable for a cut finish, but may cost the spinner heavy damages into the bargain.

Class IV.—Thick coating weft yarns are used in large quantities to make cloths where the greatest possible bulk and weight are required at the lowest possible price, when fineness of texture is not a desideratum. They appear as weft in many styles of weave; for example, single 12^s might be used to weft a 2×2 twill with $^2/24^s$ warp for a raised finish, or the same counts might be used as backing weft for a double, or a weft-backed fabric. The origin of the tops is shrouded in mystery, for the simple reason that few of the people who make them announce the fact from the housetops.

They are, as a Yorkshireman would express it, made from "all nations," and contain the short wool which is rejected as unfit to go into tops which are to spin to finer counts. Plenty of the tops are quite as fine in the fibre as 60^s, and are always offered in the market as such, although it is very unusual for the shortest tops to spin beyond 30^s. Sometimes spinners mix them with longer tops to reduce the price of blends for such counts as 36^s; but as they are sure to need more twist to give the necessary strength, (especially for twofold warp), it is very uncertain if anything will be saved by putting them to such a use. On the other hand, they are of real value for making single-weft yarns from 12^s to 18^s counts, and if well managed in the drawing and spinning, a very good yarn may result. For such thick counts it is not necessary for the tops to go through all the usual drawing boxes, but their shortness makes the drafts short in every process, and the output of a set of drawing is much less than it would be for the same weight of roving from a longer top.

Class V.—Hosiery yarns, like most other classes, contain wool from almost every country and of very varied length. For example, some of the better crossbreds used in Bradford find a considerable sale in Leicester, although they are far from bulky in the grey, and have no special tendency to fill in the fabric. The typical hosiery crossbred, on the other hand, is a rather nondescript top of very irregular average length, which will not spin beyond thick counts, and will fill well after scouring, whilst the enormous trade in mule-spun yarns for underclothing and stockings is done in Botany qualities of a very different type.

The parallel arrangement of fibres, which is so typical of all other worsted yarns, is of little value in this trade, and for

many kinds of hosiery, bulk in relation to weight is of more value in a yarn than length in relation to weight. In this respect hosiery yarns have something in common with woollens. This peculiarity makes Buenos Aires wool of more value in this trade than in any other. It fills well, and the shortness of a great deal of the wool is no drawback, because the counts required are so thick. Then, again, it is a matter of common knowledge that a great deal of the wool which comes from South America is discoloured, and it happens that there is such a vast amount of wool used for black stockings, that a ready sale is found for nearly all the supply.

These two reasons, taken together with the type of machinery employed, explains how soft and level hosiery yarns can be made at such low rates. French drawing and mule spinning are nearly always used for the majority of hosiery botany yarns, for three reasons.

1. They are particularly suited for dealing with tops of short staple.
2. Wool can be spun without oil, and cannot easily be spun if it contains the amount of oil generally applied for the Bradford trade; this makes the yarns light and bulky, and easy to wash after they are made up.
3. In practice twist proves to be a matter of the greatest possible importance, and no yarn, either single or twofold, can ever be good value for hosiery if it contains many turns per inch.

Turns in spinning vary in relation to the thickness of the yarn, not necessarily in direct proportion, but a thick yarn will always require fewer turns to make it of the same *relative* strength as a thinner one, and therefore a single 14^s yarn will

always tend to fill better than a $^2/28^s$, just because each thread of the 28^s has more turns than the 14^s, if both are made from the same quality. The single yarn will also be rounder and fuller, and if it were not that the twofold yarn retains its strength under all circumstances better than a single yarn, it is probable that single yarns would be universal in the hosiery trade. There are, of course, special trades, such as that in fancy shawls, where folded yarns are used, because special effects are desired. Twists of unequal counts, forming spirals, may also be used for similar reasons, and three and fourfold yarns, as well as very thick singles, go in small quantities for the making of fringes, tassels, etc.

For special trades, particularly for fine stockings, extra fine yarns are used, and to ensure softness and evenness in these counts the qualities of Class I., A., are often necessary. If they are used in twofold, the yarns are smoother and smaller in diameter, as they come from a cap or ring frame, than a mule yarn would be, because the fibres are arranged in more or less parallel order by the machinery, and kept in that order by the oil which the yarn contains.

If these yarns are thoroughly scoured after knitting, their excellent quality and the unusual extent to which they cover, will help to make a very full and high-class fabric; the only danger being that they may tend to take a finish more nearly akin to that of a dress piece than is desirable.

Class VI.—Fine crossbred warp and weft ought to possess many of the properties which are desirable for yarns of Class III. if they are to give satisfaction.

If a crossbred top is to spin evenly to the finest possible counts, a good average length is even more essential than it is for botany, and considerable care is requisite in selecting

materials, simply because the greater length of the top makes it possible to have greater discrepancies between the lengths of the longest and shortest fibres.

The chapter in "Principles of Wool-combing," which deals with the analysis of tops, shows that if a top is to spin well it should have few, if any, fibres less than half the length of the longest, and this rule applies with special force to crossbred qualities. For instance, if the longest fibres of a 54^s top were 6 in. long, it should not contain any appreciable quantity less than 3 in. in length; and if the quality were all right, such a top should spin easily to 52^s. For this purpose we are supposing that the top contains approximately equal proportions of 6-in., 5-in., 4-in., and 3-in. fibres; but, on the other hand, if it should happen to contain an additional quantity of 2-in. fibre it is very likely that it would only go nicely to 30^s.

It was pointed out under Class III. that such a top might make a satisfactory hosiery yarn, and on the same principle a 40^s top of equivalent composition, would do very well for the carpet trade; but for coatings the length of all the fibres must be fairly uniform, because evenness and absence of twitty places are very important factors in a yarn for coatings or trouserings.

Fifties qualities are, of course, frequently used for cloths with a cut finish, but it may be taken that they are more generally used for cloths like serge, which have a more or less fibrous face when finished, and when that is the case they are not so apt to show any slight imperfection in the yarn, because the fibres of the various threads are so blended by the finish which is given to the face of the cloth, that the fabric almost resembles a felt, and the interlacings of individual threads are indistinguishable.

Like many other good old English words which have been adopted by various trades as technical terms, the word "serge" has entirely lost its original meaning. It has, in fact, twice changed its meaning. In "Webster's Dictionary" of 1864, we find that serge is described as—

1. Originally a silken stuff.
2. A woollen twilled stuff, the warp of which is worsted and the weft woollen.

To-day it is so unusual for a serge to be made half of worsted and half of woollen yarn, that if a spinner were asked for a $^{2}/40^{s}$ or $^{2}/46^{s}$ serge yarn he would understand that good long fibre was expected, and also that he was to use wool which had the sharpest possible handle, and would at the same time spin to the required counts.

As already stated, the cloth is usually finished with sufficient fibres on the face almost to hide the interlacings of the weave. The fibrous nature of crossbred yarns, naturally tends in the same direction, and the scouring and milling processes through which the cloth goes, help to rub up the fibres from the centre of the cloth, so that at first sight it resembles a felt with the fibres arranged in no apparent order on the face. If the piece were "raised" by mechanical means, the fibre would form a nap or pile, lying more or less in one direction, and as the nap would be both longer and less firmly rooted in the threads, it would not wear so well.

Doubtless the type of finish now accepted as serge was the natural result of beating and washing a cloth made of worsted warp and woollen weft; but the woollen weft can never wear like a good long twofold yarn, and it often happens that quite fine fabrics are built with twofold weft as well as twofold warp. These, if properly twisted and well finished

and dyed, give a fairly close and very strong fabric, which may be sharp to the touch at the same time that it looks well and is very pliable.

For reasons explained elsewhere, a twofold yarn is relatively stronger than a single. The single yarn, on the other hand, often fills better (see Class V.), and for this reason it is often used for weft, because, at the same time, it costs less per pound; but, from the weaver's point of view, a cloth of twofold weft and twofold warp is nearly always better value—exceptions to this rule being due to special circumstances in make or finish.

Tailors often call a botany twilled cloth of navy blue a serge, and, according to the dictionary, they are quite as correct as those who restrict the term to crossbred yarns and cloths with an uncut, or slightly raised face; but the latter meaning is now so well understood in the trade, that it is highly desirable that it should be retained for this definite purpose, because there is no other term which covers exactly the same meaning.

The question of the relative strength of yarns as compared with the diameters of their component fibres is, of course, one in which every class or quality differs from every other, and it is only selected for treatment here because the alteration in size of fibre from botany to crossbred is more visible than the alteration between any other two classes. It must be clear to every one that when a 50^s yarn is spun from a 50^s quality, it cannot contain as many fibres as a yarn of the same weight (or size) made from, say, a 60^s quality, and, within certain limits, it always happens that the yarn containing the most fibres, spins better and is stronger with an equal amount of twist. This is usually true, in spite of the

greater length of fibre in lower qualities, which undoubtedly helps them to spin better than they would do if they were short in staple.

In practice, yarns are often wanted as soft as they can be spun; that is, containing the least amount of twist with which it is possible to get them from the spinning rollers on to the bobbin, and when this is the case, the finer the fibre in a top, the better will the yarn suit, because it will need fewer turns per inch to give equivalent strength, and, as a consequence, the cost of spinning will be reduced in proportion.

The types of weave into which crossbreds are woven probably do not vary as widely as in the case of Botanies; but everything which was said in Class I. in regard to defects which are more visible in one type of weave than another is equally applicable to this and all other classes.

Class VII.—Low crossbred warp and weft may be said to include $^{2}/40^{s}$ as its best quality, and to run down to the longest and lowest of the wools which are grown on well-bred Lincoln and Australian crossbred sheep.

The term Crossbred is often incorrectly used in this case, for it often occurs that pure bred Lincoln and Leicester sheep, grown in Australia, are classed as crossbred: the term being often used now, simply to distinguish between home and colonial grown wool.

In Botany and fine crossbred wools, as they are packed for the sales, hogs or hoggets are often classed and sold quite separately from the wether wool, though it is unusual to comb them up into separate lots of top; but in this class, hog wool is often of so much greater value than wether wool, on account of its length, that it is usually combed up by itself. In it each staple ends in a point just as it was first arranged by

Nature; it is usually longer than wether wool, the staples of which always remain square ended, as they were left by the shears after the first clipping.

In low crossbred wool, spinning power is the property most essential to buyers, if the tops come in at the right price; and as good uniform length is one of the most important attributes of a good spinning top, hog wool usually sells better than that of wethers. A certain fineness of fibre is, of course, necessary also, but in these lower qualities it is easy to detect differences in the diameter by the ordinary methods of judging, which need not be enlarged upon here; but the spinning power of a top sometimes varies when both length, strength, and diameter of fibre are constant, and changes of this kind are attributed to alterations in the size of scales or the condition of the serrations. Serration being the term for the upturned edges of the scales.

It is a matter for regret that no positive proof can be offered as to the part serrations play in yarn structure, and the only impartial method is to state both facts and theories, both for and against their importance.

Beginning with well-known facts, we find that in certain years, which could be named, the spinning power of almost the whole Leicester and Lincoln clip from Australia deteriorated appreciably, without apparent reason. Quality and average length were fully maintained, and the alteration was therefore set down to the condition of the scales, or serrations.

It is not easy to see how the number or size of the scales can be affected by alterations of climate, but it seems quite natural that if the sheep is starved, the fibre will lack nourishment and become dry, in which case one would expect that the edges of the scales would be more prominent than if the fibre

were well nurtured. As far as can be ascertained, this is the very opposite of the real state of the case: wools which have been grown in a year of drought being always less suitable for spinning than wool from sheep which have been continually well fed; wool taken from the skins of sheep which have died being the worst value of any class.

The power of certain wools to "mill" or "felt" well, in the finishing processes through which woollen cloths go, is always attributed to their having a great number of prominent serrations. It is very unusual to find the edge of a scale standing up more than $\frac{1}{20}$ of the diameter of the fibre, and $\frac{1}{40}$ of the diameter is a much more usual amount of projection. That means that in a 40^s fibre with a diameter of not more than $\frac{1}{400}$ in. the serrations would not project more than $\frac{1}{8000}$ in., and as both fibres and serrations in such a top vary very much in size, we may say that most of the serrations would be less than $\frac{1}{16000}$ in., and many of them less than $\frac{1}{20000}$ in. in height when seen in profile.

Each fibre would have from 400–600 rings of serrations per inch.

In a fine Botany top it is common to find fibres of 0·0008 in. diameter in a 60^s to 70^s quality, with serrations, say, $\frac{1}{15}$ of their diameter or 0·00053, say $\frac{1}{20000}$ in.; having at least 1000–1200 scales per inch along their whole length.

Undoubtedly the beating, crushing, and bending to which the fibres are subjected in milling, do cause them to adhere to one another with wonderful tenacity, and it is possible that the process raises the scales above their natural level, and so gives them more grip on one another.

Unfortunately, a microscope objective which is powerful enough to show the serration plainly, has a field so flat that it

is impossible to see far enough into the fabric to make microscopic *proof* possible, and the difficulty of milling or felting Cape wool affords an argument against this theory.

Under a good microscope it is easy to see that Cape wool is well serrated, whilst it is a matter of common knowledge that no amount of milling will make the fibres adhere to one another as Botany fibres do, nor will it spin as well, and therefore it is fair to surmise that serrations are not the only attribute of wool which makes fibres cohere, and gives them spinning power.

If the usually accepted theory is correct, and Cape wool is only the exception which proves the rule, the twist which is put into any yarn will have two distinct effects.

1. It will naturally bind all the fibres into closer contact with one another throughout their entire length, and in so doing it will add strength to the thread, because there will be so much extra friction between the fibres, that even if they were smooth like silk they would hang firmly together in thread form.
2. But when there are serrations on the outer walls of the fibre, the twist will so press the fibres together that almost every scale edge will interlock with a serration on some other fibre, of those composing the thread, and therefore with equal twist and equal diameter and length of fibre, a thread composed of wool fibre should be stronger than one of cotton or silk.

As a matter of fact, a silk thread is stronger than one made of wool, because, although the silk fibre has no serrations, it is finer than the wool, and there is consequently more friction because there are more fibres in a thread of equal

weight; quite apart from the fact that silk fibre is often very long in comparison to its size, and is naturally stronger in consequence.

Cotton, on the other hand, goes far to disprove the value of serrations, for it has no serrations, and yet cotton of equal diameter, but less than half the length of wool, will stand a draft of three times that of the best merino, and give, according to published figures, an actually stronger yarn.

As long ago as 1867, a Mr. Burgess, in America, propounded a theory as to the value of waviness in wool rather than of serrations, in regard to spinning power. Cotton spinners always attribute the wonderful spinning power of cotton to its spiral character, and as the waviness of wool is much more allied to this spiral character than serrations are, it is time that the whole question was reconsidered.

It is unfortunate that no definite deduction can be drawn from this reasoning, for it only seems clear that the condition of the scales varies with variations of climate, just as they are undoubtedly affected by severe treatment in the washing, to such an extent as to alter the spinning power of a top.

There is as yet an unsolved problem, which will some day yield to systematic investigation, and there is little doubt that if it were done, either by a well-equipped textile school or by some private man with the necessary machinery and apparatus at his disposal, it would not only be an addition to the science of the industry, but would amply repay the trouble of research.

Class VIII. Demi.—There are probably few technical terms in the trade which convey a definite and correct idea to so few people as does the term Demi. In fact, it may be said that there are few people outside the rather limited circle of

firms who make demi yarns, who take the trouble to find out what is the composition of the yarns, and the consequent meaning of the name. If demi was ever intended to infer that the yarn was halfway between a lustre and a crossbred it is not strictly accurate now, for demi and lustre are made from different classes of wool, the former being nearly allied to crossbred in quality, nature, and length, and being altogether without the lustre which gives its name so justly to the other section of this class.

There is, of course, no doubt that demi did originally mean half lustre, that is to say, the term inferred that a yarn was made from wool possessing half the lustre of the very brightest kind of English wool. As a matter of fact the term is still meant to imply that both English and crossbred wools are present; but, on the other hand, it is an open secret that there are on the market yarns made entirely from crossbred and entirely from English: both varieties being sold as demi.

Demi yarns are seldom spun as far as crossbreds, in fact, it is not often that qualities are spun "as far as they will go." There is an immense trade in $^1/30^s$ from a super quality which has sufficient length and quality to qualify for a 40^s top if it had been in the class above. The yarns are spun direct on to paper tubes on flyer frames, and they are then packed into large cases for shipment.

There is also a large trade done in $^1/16^s$ cap and flyer yarn on rather larger tubes from a quality which in diameter of fibre might equal a 36^s crossbred. It goes to the Eastern market; and in addition to these single yarns, large quantities of $^2/24^s$ cap spun and cap twisted, or cap spun and ring twisted, are made up on $1\frac{1}{2}$ or 2 yd. reels into 560 yd. hanks, and packed into 10 or 12 lb. bundles for export.

CHAPTER III

SPINDLE THEORIES

In view of the fact that many things occur in the worsted industry for which the reasons are imperfectly understood, it is unfortunate that so few practical men have time enough to follow up facts which come under their notice, so as to account for many of the phenomena which occur in the processes they control. It is clear that reasons exist for every limitation, as well as for every action, which takes place in the machinery, and it is the object of the following chapters to state and illustrate as simply as possible, all theories which are generally accepted as correct. Where there are not sufficient facts to prove why curious limitations apply to some processes—drafting, for example—the *pros* and *cons* of the case will be stated as fairly as possible, with the object of establishing some working theory which may afterwards be checked or conclusively contradicted by others.

With this end in view, the work of complicated modern machines must be analyzed into its simplest component parts. For example, in common parlance a spinning frame is said to reduce a roving to a spun thread—that is, to reduce a twisted sliver of a given size to a smaller size of a similar nature. But to understand the underlying reasons which effect the change, three distinct processes must be recognized—

1. The drawing out of the fibres of the sliver to two, three, or more times their original length by means of the back and front rollers.

2. The insertion of twist into the yarn by the spindles.

3. The winding of the yarn on to the bobbin, spool, or cop by many widely varying methods.

Every kind of spindle box, spinning frame, and mule which is used in the drawing and spinning of worsted yarn has these three duties to perform. Usually they all go on together continuously, but in some machines, notably in the mule, they are intermittent and follow one another in succession. For lack of any better method, chronological order will be adopted—that is to say, spindles come first, because they were in use in Egypt about four thousand years ago, and the mule spindle takes precedence over all others, because it is the modern adaptation of the Hindu one-thread wheel of great but unknown antiquity, whereas all throstle spindles are the outcome of the Saxon wheel, invented only about 1630 A.D. Rollers, involving theories of draft and ratch, can only be traced back to 1730, when they were first used by Wyatt, for we have no records whatever of the methods adopted by Dereham and Haines in their automatic spinning frame of 1687.

The Mule Spindle has, then, two claims to be discussed before any other—

1. Its origin is traceable to the oldest of all forms of spinning machinery.

2. In *theory*, its action is by far simpler than any other spindle, and the method of winding yarn on to it involves fewer theoretical considerations.

As this chapter deals only with the theoretical merits of

the different spindles, there is no need to describe the very intricate mechanical means necessary,

1. To insert the twist into the yarn; and

2. To wind the yarn on to the spindle of a mule, for it must be remembered that there is a vast difference between the simplicity of *theory* and the simplicity of *practice*. The extreme complexity of the spindle drive of a mule is wholly due to the fact that the putting in of the twist and the winding on of the yarn in a mule, are two separate processes, each of which takes place on the same spindle at a different period of the machine's action, each involving one or more speeds peculiar to itself, in one or more different directions; the variation of speed in the winding on being due to the constant alteration of the diameter from the spindle to the cop, on to which the yarn is being wound.

Speaking of theory only, therefore, it is found that in a mule spindle there are two very simple processes going on, and their alternation depends on the fact that the output of the rollers of a mule is intermittent. To put twist into the yarn whilst the rollers are running it is only necessary that the spindles should run fast enough to put a certain number of turns into every inch of yarn which comes through the rollers. In other words, if the rollers are turning out 600 in. per minute, and ten turns of twist are required in the yarn, the spindles must run at 6000 revolutions per minute, or must continue to run for a definite time after the rollers stop. During the whole period through which the rollers run, twist is being put into the yarn from a given point, which is the apex of the spindle, and the consequent movement imparted to the stretch of yarn between the points of the spindle **S** (Fig. 6) and the roller **R** is a simple rotation upon its own

axis. To all appearance it is stationary, if we except the vibration and the continual lengthening of the distance between **S** and **R**.

When the spindles have revolved so many times that they have put, say, ten turns of twist into every inch of the 60 in. of yarn between **S** and **R**—that is, 10 times 60, or 600 revolutions,—they stop automatically, unwind a few turns, and after a wire guide **G** has descended, as shown in Fig. 7, and whilst the carriage runs in until the points of the spindles **S** are close to the rollers **R**, the spindles revolve at

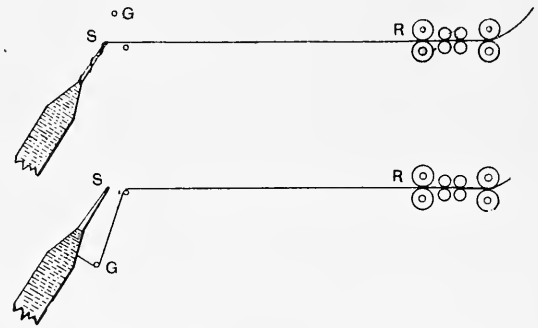

FIGS. 6 AND 7.

a slow speed, which varies just so much, that they wind the yarn round the spindles or cops, at exactly the same speed at which the carriage moves.

The process is an exact imitation of that of the one-thread spinning wheel, where one hand drew out the thread from the distaff, at the same time that the spindle was rotated at full speed to put in twist. As soon as the yarn was twisted sufficiently, the position of the left hand was altered so as to guide the thread on to the cop, which was then rotated at a very slow speed, by means of the wheel and the right hand.

Nothing can be simpler in theory, whilst few automatic movements require more intricate mechanism in practice.

In past days it was always possible to tell the yarn from a one-thread wheel from yarn spun on a Saxon wheel, simply by their different character; and the same thing is true to-day of mule and throstle yarns. Some people say that a mule yarn consists of a core of long fibres, round which the shorter ones are grouped, exactly as they are in a hen-wing sliver, where the wool comes from the comb on to a leather, with all the long fibres on one side and all the short ones on the other, so that when they are rolled up by a rotating funnel the short ones are on the outside and the long ones within. It is not easy to see how such an arrangement could come about in yarn simply on account of the drafting, and if there is any truth in the supposition, it seems likely that the peculiarity is due to the method of drawing employed, and until further investigations have been made it would be safer to consider the whole thing as unproven (see Chapter VIII.).

There is, however, one point which is quite clear, and which cannot be too much impressed on practical men. For in all throstle frames the yarn between the rollers and the point where it reaches the spindle is swung violently round as the spindle rotates, so that in extreme cases it may travel sideways through the air no less than 100 ft. in the two seconds it takes to move from the roller to the bobbin. For example, in spinning 60^s warp yarn with twenty turns per inch at 6000 revolutions per minute, the rollers will turn out 300 in. per minute, so that if the eye be 10 in. from the cap edge, any portion of the yarn will take $\frac{10 \times 60}{300}$, or two seconds to travel that distance. But in that time the spindle and the balloon will have revolved 200 times; and if the

greatest diameter of the balloon be 4 in. and its average diameter 2 in., the average circumference will be 6 in., and the distance the thread swings will therefore be 6 by 200, or 1200 in. at a speed of 50 ft. per second.

This tremendous rush through the atmosphere naturally affects the position of individual fibres. In the mule all such movement is totally absent. It has already been stated that the twist is inserted at the exact point of the spindle, so that the only appreciable movement in the yarn is the one which is most important, this being a rotation about the axis of the thread which is in course of construction. The total absence of gyration is undoubtedly the reason why mule yarns have less fibres on them than yarns spun at the same speed on cap spindles, and makes it possible to run mule spindles at a greater speed than those of ring, cap, or fly flames. This ability to run at extra speed ought, of course, to make mule spinning cheaper than any other kind, and it doubtless would do so if it were not for the fact, that mule rollers only continue to turn out yarn for about three-quarters of the time the machine runs.

The relation of the spindle to the nip of the rollers is also a matter of great importance, and in the mule the arrangement is almost perfect. The twist which is put into the yarn by the spindle runs without any hindrance whatever, right up into the nip of the rollers, because the tip of the spindle always remains in a line which is almost a tangent of the top and bottom rollers at their point of contact.

It is easy to see the excellence of this arrangement, because the moment a fibre emerges from between the rollers, the twist affects it, and it is at once bound up with all the other fibres, into the body of the yarn, to increase the strength

and to resist the tendency which the carriage has to pull the threads in two.

This disposition will be best appreciated by a comparison with the arrangement of a cap spindle and rollers, for in nearly all throstle frames it is impossible for all the twist to reach the fibres, until they are an inch or more away from the nip, and during that time they are subject to the strain which is put on to the yarn in order to make it wind compactly enough on to the spool or bobbin.

The Fly Spindle must be considered next in order to that of the mule, for two reasons. It is far older than the cap or dead spindle, and in theory it is also considerably simpler. The fly spindle existed in a wonderfully perfect condition on the Saxon wheel, which was in use quite early in the seventeenth century; in fact, the only thing which it then lacked was a traverse motion for the bobbin. In place of that, it was so arranged that the operator had to stop frequently to alter the position of the thread from one to another of the numerous hooks, which guided the yarn on the flyer, in order to ensure that all parts of the bobbin were equally filled. The fact that both bobbin and spindle were horizontal had nothing whatever to do with the theory, either of twisting or winding on the yarn.

There is one point of great contrast between the fly spinning and mule spinning which is absent in fly roving, to which attention should be directed, not because it affects the twist (as at first sight it would appear to do), but because something of the same nature must be considered in regard to cap spinning. In mule spinning the twist is inserted at a point which is practically the centre of rotation of the spindle, whilst in fly spinning, the end of the thread goes direct

from the rollers to the twizzle of the flyer. It is equivalent to putting twist into a rope by fastening it to the centre of a crankpin, instead of to the end of the shaft which carries the crank. Both would give exactly the same result in regard to the amount of twist put in, but the question of strains and the relative stretch of fibres forming the outside and inside edges of the sliver are of no small interest.

This is shown in Fig. 8, where the side of the sliver **BC** is 2 in. longer than the side **AC**, whilst **BD** is 2 in. shorter than **AD**, the alteration in length taking place every half-revolution of the flyer **F**. This particular detail is not of any important moment when dealing with a thread from a spinning frame, for it comes from the rollers so thin, that it may be considered as having no width at all; but in the first spindle drawing boxes the sliver often comes through the front rollers between 2 and 3 in. wide, and if it were carried direct to the ends of the flyers (which are virtually cranks with a 12-in. stroke), the alteration in the strain on alternate sides of the sliver would be so great as to cause a lengthening, first on one side and then on another, to such an extent that the resulting slubbing would not be round, like the rope shown in Fig. 9, but would more resemble the shape of a triangular strip of rubber after it had been twisted as illustrated in Fig. 10. (Slubbing is here taken to mean sliver which has had twist put into it.)

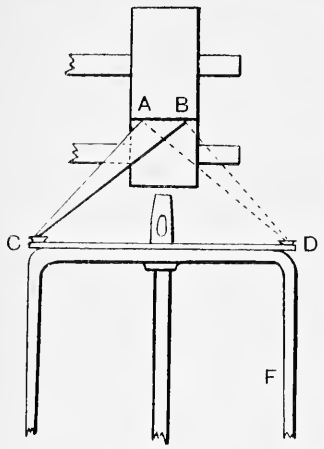

Fig. 8.

To minimize the uneven stretching of the sliver as far as possible in all drawing processes, the fibres are taken direct from the rollers to a hole in the top centre of the spindle, and are thence directed to the ends of the flyers. This arrangement so far does away with stretching, that it need not be considered in regard to reducing and roving boxes, but its practical relation to the largest drawing boxes deserves attention.

The broad ribbon of fibres which emerges from the front roller, converges, not to a point, but against one side of a hole, about 1 in. in diameter in the spindle top. The fibres are naturally directed to that side of the spindle aperture, through which they are directed to the extremity of the flyer arms, and although this is only 1 to $1\frac{1}{4}$ in. eccentric, it is

FIGS. 9 AND 10.

sufficient to give a slightly spiral character to the sliver, when it acts in conjunction with the traverse of the sliver for 1 in., or even less, to and fro across the face of the front roller.

It has now been seen that the actual insertion of twist by a fly spindle is a simple matter; but the vertical position of the spindle makes it difficult to place it in such a position that the twist can run right into the nip of the rollers, as it does in a mule. Rightly or wrongly, it has always been considered that the length of yarn between the spindle top and the nip should be as short as possible, to avoid any stretch or lengthening of the thread by reason of the drag of the bobbin. The fact that the spindles are placed vertically, and are always below the centre of the rollers, so that the

twist can run straight up the thread towards the nip, leaves the maker no alternative, but to place them in such a position that a portion of the thread always rests on the circumference of the roller, in such a way as to prevent twist running into it. It often happens that breakages occur in that portion, because the whole length of yarn from the nip to the flyer, is under considerable tension.

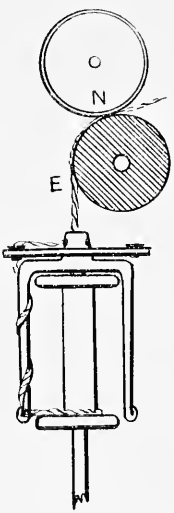

Fig. 11.

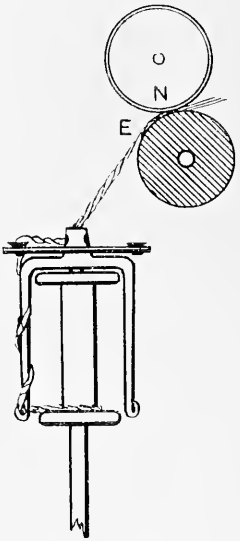

Fig. 12.

If the spindle stands close under the rollers the amount of yarn resting on the roller is consequently large, from **E** to **N** (Fig. 11); but there is the distinct advantage that the thread does not rest at all on the tip of the spindle, or on the eye of the wire board, but runs directly in a line with the spindle from the roller.

On the other hand, if the spindle be placed away from the roller, as shown in Fig. 12, the rubbing of the yarn on the

spindle top or on the eye increases considerably, though the length of yarn resting on the roller is smaller.

In spinning, where the wire board with its pot eyes takes the place of the hole in the spindle top as a means of directing the end, the eye must always be exactly over the spindle, but from it, the thread often bends at an angle of 120° towards the roller, as in Fig. 13, and it is natural in such a case that the twist does not run freely forward towards the nip. If the wire board is always $2\frac{1}{2}$ in. below the nip, the farther the spindle is away from the roller the sharper the angle will naturally be, and the less twist will reach the nip. On the other hand, the farther the tip of the spindle is away from the roller, as shown by the dotted position in Fig. 13, the more is the thread lifted from the surface of the roller, allowing almost all the twist which passes the eye, to go right forward to the nip. A compromise is the only logical plan, a place being usually chosen for the spindle where the angle in the thread is as small as possible, and the amount of fibre resting on the roller is also small.

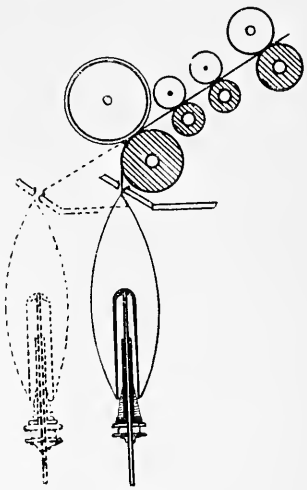

Fig. 13.

Theoretically, there are two easy ways out of the difficulty, but in practice both involve very serious objections, which make the remedy worse than the fault. The twist can be made to run straight into the nip,

1. By tipping up the rollers and carriers until the

tangent of the rollers at their point of contact is a continuation of the centre of the spindle, as shown in Fig. 14, although on account of the absence of pressure on the carriers this plan involves great difficulties in spinning and is unpractical.

2. By raising the spindles to an angle of about 40°, as in Fig. 15, so that they are in exactly the same relation to the rollers as in Fig. 14. This causes great difficulties with the drag of the bobbin in fly spinning, and other difficulties which will be discussed more fully in regard to cap spinning.

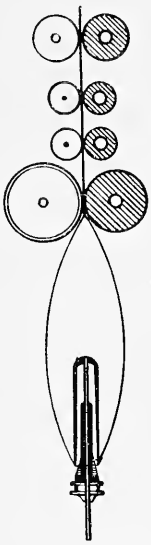

Fig. 14.

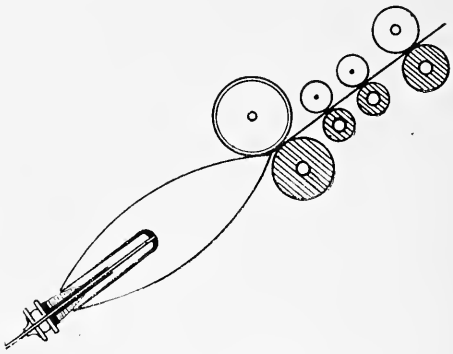

Fig. 15.

The winding of the yarn on to the bobbins by flyers is simple in both theory and in practice. The flyer is fixed to the spindle and always revolves at a uniform speed, whilst the bobbin, through the centre of which the spindle passes, stands on a cloth or felt washer, which is used to prevent the bobbin rotating as fast as the spindle.

In order to prevent the spindle rubbing against the sides of the bobbin with sufficient friction to make it rotate, the

hole in the barrel of all fly bobbins is bushed—that is to say, for a $\frac{1}{2}$-in. spindle, a hole would be cut, say $\frac{3}{4}$ in. in diameter, through the whole length of the bobbin, and a short bush inserted in each end to keep the spindle in exactly the centre of the bobbin without causing any serious friction (see **Y**, Fig. 16).

The action of winding-on is simple, as shown in Fig. 11. The yarn enters at the centre or eye, and is carried to the extremity of the wing or twizzle, and from there it is made fast to the barrel of the bobbin. If the rollers should happen to be standing still, the bobbin would be dragged round by the flyers, in spite of the friction on the washer, at just the same number of revolutions per minute as the flyer made; but when yarn is being paid out to the flyer, the natural tendency of the bobbin to stand still, makes it revolve more slowly than the flyer, and so wind on the yarn, just as if the flyer was stationary and the bobbin was revolving in the opposite direction.

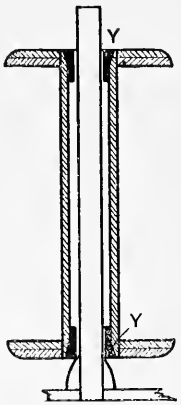

FIG. 16.

For example, with a box making fine roving, with one and one-third turns of twist per inch, and a flyer running 960 revolutions per minute, the front roller would be turning out 720 in. per minute. If the bobbin barrel measures 3 in. in circumference, it would have to lose 720 in. per minute, or 240 revolutions per minute on the flyer, and it would therefore be making 960 minus 240, or 720 revolutions per minute. With all other particulars the same, and supposing the same bobbin to be full—that is to say, 9 in. in circumference,—it would still have to take up 720 in. per minute

from the flyer; but 720 in. would only mean 80 wraps round the 9 in. circumference, and therefore, when full, the bobbin would be travelling 960 minus 80, or 880 revolutions per minute. This shows that the bobbin runs at speeds varying from 720 to 880 revolutions per minute.

At the same time as it increases in weight it also increases in speed, and the amount of power necessary to move it must therefore also increase. The power is applied through the yarn, and the strain on it would increase very seriously, if it were not for the fact that when the bobbin is empty, the tension is applied at $\frac{1}{2}$ in. from the centre, and when full at $1\frac{1}{2}$ in. from the centre. This is the exact equivalent of applying equal power through 1-in. and 3-in. drums respectively. The strain on a belt over a 3-in. drum will only be one-third of what is necessary to do the same work on a 1-in. drum, and it may therefore be said that the relation of the strains is as the weight of the bobbin, multiplied by the speed and divided by the diameter.

$$\text{This gives, when empty, } \frac{\frac{1}{2}\text{ lb.} \times 720}{1} = 360;$$

$$\text{and when full, } \frac{1 \times 880}{3} = 290,$$

showing that the strain on the end varies continually, and that it is least when the bobbin is full, making the outside layers softer, so that the bobbin does not hold the greatest possible amount of material.

With other speeds of the front rollers and flyers, the alteration in the strains might be reversed; but any irregularity in the tension is naturally bad, and care must always be taken that if the strain is right when the bobbin is full, it is not too great when the bobbin is empty, or *vice*

versâ, or there will be serious risk of stretching the yarn in places.

Cone Roving Flyers.—In cotton machinery, and sometimes in cone roving for worsted, the flyers are so arranged that by means of the centrifugal force a movable arm hinged on the flyer is always kept gently pressed against the barrel of the empty bobbin or against the roving. This is done all through the process of building the bobbin, in such a way that the angle at which the strain is applied to the roving does not vary, but remains constant throughout.

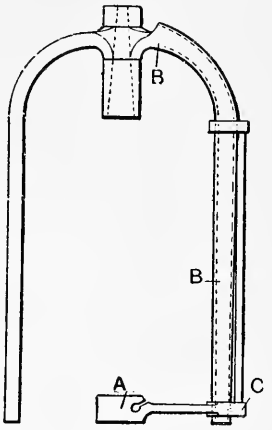

FIG. 17.

This useful addition to the flyer is illustrated in Fig. 17. The flyer differs from the ordinary worsted roving flyer in being tubular, so that there can be no balloon, and the fibre is guarded from the air during the whole of its passage from the nip to the bobbin. This keeps it very smooth, and it is curious that the device has never yet been applied to open drawing. The wing **B** of a flyer very similar in shape to that in use in open drawing carries a movable arm **A**, so placed that the whole arrangement is equivalent to a flyer which varies in size with the varying diameter of the bobbin. The arm **A** is pivoted in such a way on the flyer arm **B**, that it can swing freely round in an arc of considerable size. If this arm were unbalanced it would naturally swing as far from the centre of the spindle as possible, when the flyer was rotating; but the very reverse is effected by an ingenious method of balancing.

The arm **A** does not end in the pivot round which it swings, but is continued to a balance weight **C**, which is heavier than the arm, and is placed in such a position that the centrifugal force swings it away from the centre and causes the arm to move inwards and press gently against the bobbin whether it is full or empty.

It is clear that in hand spinning the amount of twist per inch will vary at once if the amount of yarn drawn from the distaff by the fingers varies from one minute to the next, and the variation will also increase if the speed by which the wheel is driven by the foot should be allowed to alter in the slightest. It is probable that these two possibilities often accounted for great variations of twist in the same hand-spun yarn; but if the error is set as low as 30 per cent., it will be seen that the Saxon wheel was liable to even greater alteration. In any case, where the speed of a flyer and a bobbin continue in exactly the same proportion to one another, the amount of twist put into the yarn would vary directly in proportion to the diameter of that portion of the bobbin on to which the yarn was being wound. For example: With the flyer running 1000 revolutions per minute, and a 1-in. bobbin running 960 revolutions per minute, the difference is 40 revolutions per minute, which is equal to a take-up of 125 in.; but 1000 turns in 125 in. equals 8 turns per inch. If the bobbin was 2 in. in diameter, running at the same speed, the difference of 40 revolutions would equal 40 wraps of $2 \times 3\frac{1}{7}$, or 250 in., and in that case the twist would be 4 turns per inch.

Yarns spun on such a principle would, of course, be useless, and it is therefore probable that the band over the bobbin of the Saxon wheel was really only used in place of the washer drag now adopted for nearly all kinds of fly

bobbins; but it is not easy to see why a moving band was preferred in such a case, when a string with a weight on the end would have done the work with much more uniformity.

It is a very common mistake to put down the smoothness of fly yarn to some inherent smoothing property of the flyer. The flyer has something to do with the smoothness, but it is only in shielding some portions of the thread from the air whilst they are on that side of the spindle which is away from the air currents. Each portion of the thread comes once or twice on to that side, on its journey from the nip to the twizzle, according as the thread is wrapped once or twice round the leg of the flyer. When the yarn is wrapped twice round the flyer in a spinning frame, the length of yarn between the eye and the flyer is reduced, and the diameter of the balloon is therefore less.

The balloon here mentioned is the apparent figure formed by the gyrating thread as it moves round through the air, and it is natural that the shorter the length of the swinging end, the less will be its weight and centrifugal force, and consequently the less will be its spiral orbit through the air. The rapid motion through the air is one of the most potent causes of roughening the fibre of a yarn. The yarn will be fibrous or smooth in proportion to the speed and distance it travels in this way, and the main reason that flyer yarn is smooth, is that the fly spindles run at about half, or less, the speed of cap spools. If the speed of a cap frame be reduced to that of a fly frame, it will need a very expert judge to distinguish the difference between the two yarns.

There is no other kind of spinning, in which the application of drag is so simple as in the fly frame. The natural inclination of the bobbin to remain at rest is increased by the

round cloth washers on which it always stands, and the drag on the yarn is naturally greater when the washer is larger: therefore the only thing necessary to alter the drag is to alter the size of the washer or washers on which the bobbin stands.

Fig. 18.

The great advantage of the fly spindle is its suitability for every size of bobbin from 14 in. by 10 in. to $3\frac{3}{8}$ in. spools, whilst its one supreme drawback for spinning is the impossibility of running it at much more than half the speed of cap or mule spindles. This is due to the great difficulty of balancing the arms of the flyer perfectly, and also to the fact that the flyer is attached to the very part of the spindle which needs most support, but which from force of circumstance is often as much as 12 in. beyond the nearest bearing.

The Cap Spindle, which was invented in the year 1831, was at first called the dead spindle, simply because the spindle itself does not rotate. For this reason it is the simplest of all spindles in appearance.

In Fig. 18, **S** is the spindle proper, fitting into a hole in the stationary spindle rail. The top is tapered slightly, and carries the steel bell or cap **C**, which, like the spindle, never moves during the processes of spinning. Its one duty is to guide the yarn to the right place on the bobbin. This is done by the smooth lower edge of the cap, round which the thread is always flying when the spindle is in motion. There have been many attempts to devise a ring which will take the place of the lower edge of the cap without the use of a complete cap; but as yet the search has been in vain, for all

rings have to be connected to something, and no connection with the spindle has yet proved as simple as the cap, which can be taken off at the end of each doffing, by the simplest possible lifting movement. In Fig. 18 the bobbin **B** stands on the whorle **W**, and is kept exactly true by the brass sleeve or tube **T**. The bobbin **B** and the tube are therefore driven round together on the stationary spindle, and within the stationary cap, by the tape which runs round the whorle **W**. The twist is inserted very much as it is by a flyer, by the motion of the thread round the circle of the cap, of which circle the spindle is the centre; not as in the mule spindle, from the centre of the spindle itself.

The theory of the drag is the converse of that in a flyer frame. The bobbin conveys the motive power, and pulls at the yarn in a line directly tangential to the circumference of the bobbin. When the bobbin is full the pull is tangential to the outside surface of the yarn. When the spool is empty, as shown in Fig. 19, this line strikes the edge of the cap at an angle of 120°, and the strain necessary to make the yarn slip round the cap is therefore much greater than it is in Fig. 20, where the line strikes the cap at a much more gentle angle, say, 150°.

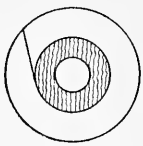

FIG. 19.

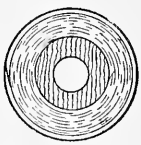

FIG. 20.

There are so many other forces involved that it would be unsafe to say that the drag is in direct proportion to the respective angles shown in these two diagrams, even if other things were equal; but there is no doubt that they have a great deal to do with the excess of drag when the bobbins or spools are used with very small barrels.

When a spool is moved round very slowly, less than 100

revolutions per minute, it is at first sight curious to notice that no winding-on takes place; and this fact must be explained, although there is no apparent reason why the yarn should wind on to the spool at all. Its natural inclination is to slip round and round the cap just as fast as the bobbin rotates, and it is not until the yarn is moving fast enough to swing out into the air as it gyrates round the cap that sufficient drag is obtained. This drag is solely due to the resistance of the air, which at high speeds, say 50 ft. per second, is very considerable, and it alters with every alteration of the speed.

This means that the yarn acts as a kind of sail to retard its own winding on to the bobbin, and the larger the sail area the greater will be the tension. The sail area of the thread is naturally increased by every inch of yarn, which, in flying round between the eye and the cap edge, forms the apparent balloon, and therefore the length of yarn between the eye and the edge of the cap is a very important factor in the setting of all cap and ring spindles. It is very easy to demonstrate how small is the friction of the yarn on the cap itself in proportion to the resistance of the air, for if a spindle be so arranged that the cap and spool rotate together at the same speed, the friction and the tangential strain on the yarn between the spool and the cap ought both to be non-existent; but the yarn will be as perfectly wound on to the bobbin as if the cap was stationary, and this proves conclusively that a very large proportion of the drag is caused by the air. In all cap spinning there are therefore three distinct causes of drag:—

1. The relation of the diameter of the spool to the diameter of the cap.

2. The length of air-resisting area of the yarn revolving round the cap.

3. The speed of the thread through the air, or the air force acting against the moving thread.

All these factors must be carefully considered, because they can be regulated—

1. By the size of the spool barrel and the diameter of the cap.
2. By the distance from the cap edge to the eye.
3. By the speed of the spool.

So far as pure theory is concerned, the cap spindle might now be left; but there is one practical difficulty with which all cap spinners are acquainted, which still awaits a definite solution. It is the licking or clinging of the gyrating thread to the cap, when by all known laws, it should be flying clear through the air, making one convex curve from end to end. This very seldom happens. Perhaps the simplest way to explain the difficulty is to set a typical case and illustrate it.

When there is enough yarn on a spool to bring a part of it to full thickness, so that the tangential strain against the cap is small, it is natural to infer that the thread, being under less tension, would fly farther from the cap; and when the lifter is down and the yarn winding on to the bare barrel, the strain should be greater and the balloon smaller. In practice it does not often happen that this is the case. The explanation is complicated by the fact that at the same point of the vertical movement of the lifter the yarn does not cling equally to the cap on the up and down strokes, and this makes it appear that it is not any definite tension which determines the amount of clinging, but rather the question as to whether the tension is increasing or decreasing. Although the reason

for this phenomenon is still to be definitely proved, it seems probable that it is due to the motion of the lifter. If the lifter is working quickly, on the upstroke the yarn will touch the bobbin first at a point slightly above the edge of the cap, as shown in Fig. 21, and the angle at the edge of the cap will be acute ; whereas if the lifter be working very slowly in relation to the output of the front rollers, the yarn will move so quickly from the cap to the bobbin that the line will

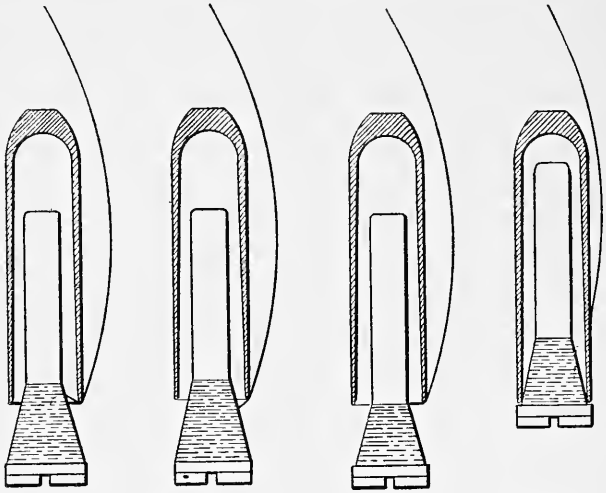

Fig. 21. Fig. 22. Fig. 23. Fig. 24.

always be approximately level, as in Fig. 23. On the other hand, when the yarn is moving slowly and the lifter falling rapidly, the point where the yarn first touches the bobbin must be below the edge of the cap, as in Fig. 22; and in extreme cases this will doubtless cause the bend of the yarn over the edge of the cap to form an obtuse angle, and so reduce the strain. It is at least clear that the clinging of the yarn to the cap as shown in Fig. 24 has something to do with the rise and fall of the lifter, and the question was only

mooted to show that the speed of the lifter may therefore not only affect the build of the spool, but that it can also affect the spin—that is to say, the number of ends which break down in a given time.

It must be clear to any one who has watched a cap spindle running, that the cap is held in position in the only way which is possible, because any outside connection with the sides or top of the cap would clearly prevent the yarn swinging completely round it, as it is bound to do, and as the spool rotates between every part of the spindle and the cap except the top, that is clearly the only place where connection can be made, and the primary object of the dead spindle is therefore to support the cap from within. This type of spindle has four great advantages :—

1. The amount of weight in the moving portions is very small.
2. The amount of bearing surface is large.
3. The strain of the band or tape used to drive the spool and tube always falls within the two ends of the long bearing surface.
4. It can, consequently, be run at high speed with very little friction.

Its drawbacks are comparatively few :—

1. The length of spindle necessary to support the cap causes any vibration of the spindle to show in an exaggerated manner in the cap.

2. This vibration is apt to wear the top of the spindle and make still worse vibration possible.

3. So long as the brass tube and bobbin are perfectly true, the vibration is very small; but the soft nature of the brass makes it wear on the steel spindle, and as it never wears

equally all round, it soon gets lighter on one side than another. When this happens, there is oscillation and vibration at every revolution, shaking the caps until they touch the yarn on the spool, or until they jump off.

Ring Spinning is almost identical in theory with cap spinning, but in practice the two differ about as widely as the mule spindle differs from the fly spindle. The dead spindle, with a sleeve rotating on it, could be used just as well for ring spinning; but the chief use of the stationary spindle is to hold the cap above the bobbin without any connection which will prevent the rotation of the yarn, and this is unnecessary in the ring frame. A more perfectly-developed spindle is used for ring spinning, in which the stress of the bands is applied in the most scientific way, and arrangements are made to prevent and counteract the effects produced by friction. The spindle itself is so intricate that a sectional diagram is the only means of explaining it.

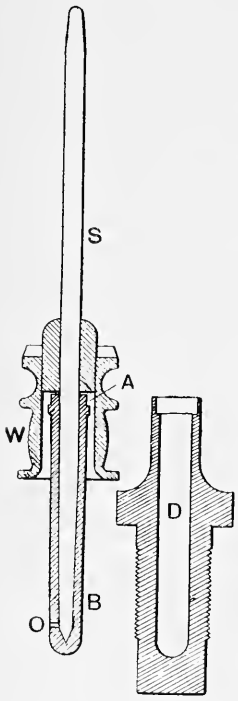

Fig. 25.

As shown in Fig. 25, the spindle revolves in the sleeve **A B**, and the whole length of the spindle between the letters **A** and **B** forms a bearing surface. The spindle is driven by the wharle **W**, which is shrunk on to the spindle and is made bell-shaped, so that the drag of the tape may fall within the limits of the bearing surface of the spindle and the sleeve **A B**. As in the case of the cap tube, this application of

strain within the extremities of the bearing surface causes more uniform friction and wear than would be the case if it were applied at a point beyond either end of the bearing surface. The socket or well **D** is constructed to screw fast into the spindle rail, and may contain oil, so that when the sleeve **A B** in its working position is fitted closely into it, the spindle is not only well supplied with oil through the hole **O**, but the whole bearing may easily be lifted out for cleansing or inspection.

Here, then, is a spindle which strongly resembles the mule spindle in size, and often, in having a fine point. Such a spindle is admirably adapted for putting twist into the thin ribbon of fibre as it comes from the rollers, but it has no arrangement to wind the thread on to the bobbin, and no central stay to which to fasten a ring which could take the place of the lower edge of the cap, as a guide for the yarn. Some arrangement, therefore, has to be devised, of such a nature that the yarn can be attached to the inner edge of a ring in such a way, that the yarn can revolve round the spindle, whilst at the same time it will be free to wind slowly on to the bobbin as it was paid out by the rollers.

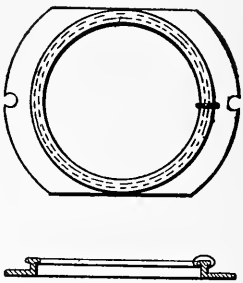

Fig. 26.

There are several ways of attaining this end, and many recent patents have been taken out to improve upon the original methods adopted. The first and simplest pattern, as shown in Fig. 26, was a ring of such a section that a light steel loop or traveller of wire could be set astride its thicker portion. The traveller is free to run round upon the ring, but

the opening between its two ends is too narrow to allow it to slip off without considerable pressure. Rings have been made of almost every conceivable size and shape, and travellers of every kind have been used to move upon them, but a modification of the old type is still by far the commonest of all those in use to-day.

When a thread is being spun, as soon as it has passed the wire-board, it is threaded through the traveller and fastened to the bobbin. As the spindle begins to revolve, a tension is applied to the yarn exactly as is the case in a cap spindle, but in this case the result is easier to understand. Looking down on the top of the bobbin and ring in Fig. 27, it is seen

Fig. 27.

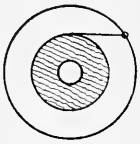

Fig. 28.

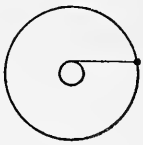

Fig. 29.

that all the time it is under tension, the thread extends at a tangent to the surface of the yarn on the bobbin, until the line cuts the ring. At that point the traveller will always be found, and when the angle formed by the yarn and the ring is very small, it will clearly be easy for the spool to pull the traveller along. When the yarn is attached to the empty bobbin, as shown in Fig. 28, the tangential line cuts the ring much more nearly at right angles, and as the angle between the thread and the ring increases, the strain of pulling the traveller round, naturally increases in proportion, because the traveller is being pulled harder against the sides of the ring. If any attempt was made to spin yarn on to the fine bare spindle, as is done in the mule, the yarn would inevitably

break, because, as shown in Fig. 29, a tangent of the spindle surface would cut the ring so nearly at right angles that the thread would simply be drawn through the traveller towards the spindle, without sufficient forward pull to make the traveller revolve round the ring and so relieve the strain.

In the foregoing paragraphs the friction of the traveller on the ring is treated as if it was the only source of drag in the ring frame, although this is far from being the case. The friction of the wire traveller, in its revolution round the ring, is naturally much greater than the friction of the thread as it swings round the cap in a cap frame; but the yarn between the traveller and the eye forms a balloon, just as does the yarn in a cap frame, and the size of this balloon, or, in other words, the air resistance of the thread as it is whirled round through the air, has also a considerable effect upon the drag.

In a cap frame the distance from a cap edge to the eye is always the same, because in order to wind the yarn uniformly over the surface of the bobbin, the bobbin itself moves up and down. In the ring frame it is different. The spindles and bobbins are absolutely stationary except for their rotation, and in order to obtain a traverse motion, the rings and ring rail move up and down the whole length of the bobbin. This has an effect which is entirely absent in cap and fly spinning. When the ring is at the top of the traverse, it may be within 5 in. of the eye, and at the bottom of the traverse it may be 10 in. away, so that the drag caused by this continual alteration in the size of the balloon varies to such an extent, that at the bottom the drag due to air resistance may be double what it is at the top, and this quite apart from the variation caused by the alteration in the diameter of the yarn on the bobbin.

This means that there is a very complicated and varying series of strains present in the ordinary ring spindle, and before perfect work in fine counts can be done, some alterations must be made. The variation in the length of thread exposed to the air pressure can easily be stopped; it is only necessary to fix the ring rail and make the spindle rail traverse, or to use dead spindles, with fixed spindle and ring rails, with a traverse motion to raise and lower the tubes and spools exactly as in a cap frame.

The question of the drag caused by the travellers is very much more complicated. An early patentee attempted to overcome the difficulty by cutting a ring with a very deep groove, as shown in Fig. 30, and putting into the groove a light steel ring just larger than the smallest diameter of the grooved ring. Clearly the light ring could never get out of place, but when pushed to one side a space would be visible through which the yarn was carried. As the spindle rotated the yarn moved the ring in such a way that the open space moved forward at spindle speed, without causing the inner ring itself to rotate at anything like the same number of revolutions per minute; in fact, it is probable that it would rotate slowly in the opposite direction. This absence of rapid rotation and consequent absence of friction on metal was intended to reduce the drag; but in practice other strains are involved which more than make up for the friction caused on the ordinary type of ring. This ring more nearly resembles the cap than any method yet devised, because the inner or floating ring

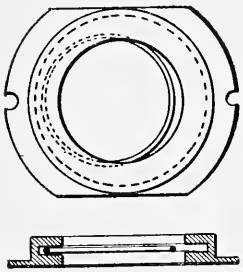

Fig. 30.

bears exactly the same relation to the barrel of the bobbin as the edge of the cap does in the cap frame.

Before the ring frame is perfect, or before it will spin soft yarns with as little drag as the mule, one very important deficiency must be overcome—that is, the variation of the drag, on account of the varying angles at which tangents from the surface of full or empty bobbins strike the ring. The only way to do this is, to invent a traveller and ring of such a nature, that the distance of the traveller from the surface of the yarn is always in the same relation to the diameter of the bobbin, whether it be full or empty. Let us take, for instance, a case where the yarn from a full bobbin 2 in. in diameter strikes a $2\frac{1}{2}$ in. ring at a certain angle and gives a certain drag. To get exactly the same drag when the bobbin is empty and only 1 in. in diameter, the angle at which the tangential line cuts the ring must be exactly the same; that means that the ring must be $1\frac{1}{4}$ in. in diameter, or $\frac{1}{8}$ in. clear of the barrel on each side, not $\frac{1}{4}$ in. on each side, as when the bobbin is full. In other and simpler words, the traveller should be nearer to the bobbin when it is empty than when it is full; at present it is, of course, farther away. A ring of this kind has been invented on the continent, but it has not yet come into general use in this country.

This is speaking purely of one single theory apart from all others, whereas it is clear that in practice, centrifugal force, friction of the ring, and air resistance to the moving thread, will all complicate matters, so that the exact proportion of tension due to any one of them will be very difficult to find out. Only one thing is absolutely certain: the traveller should be nearer to the centre, when spinning on to a small circumference than when spinning on to a larger one.

CHAPTER IV

DRAFTING AND RATCH

Drafting.—In these days we regard the rollers and kindred mechanism for drafting, as one of the simplest parts of a box or frame, and it is rather curious to notice that this method of drawing out a sliver was not introduced until 100 years after the invention of the complicated arrangement of bobbin and flyer winding, which had been devised for the Saxon wheel in the early part of the seventeenth century.

With the original distaff, where the wool was simply straightened and hung on to a rod or distaff, it stands to reason that the fibres of various lengths were not uniformly blended, when the spinner drew the thread; she must have been obliged to get first long and then short fibres quite irregularly. This would make it very difficult to produce a level thread, and the strength would be very uneven.

When combing came into regular use, a better sliver was available; the sliver being a ribbon of combed fibres, laid side by side without twist, in such a way that long and short fibres were blended equally throughout it. If the spinner draws from one end of the sliver, she is bound to get fibres of all lengths, into every part of the thread, ensuring great regularity in consequence; that is, provided that the sliver is not too thick.

It is necessary to call special attention to this point, for over-drafting is one of the most serious faults which can occur in machine drawing, and it is the modern equivalent of drawing from a badly arranged distaff. Suppose, for instance, that the sliver weighs 1 oz. for 1 yd. and is to be made into single 16^{s}. Each sliver will have to be drawn out 560 times its original length. If a sliver of 1 yd. to the ounce were used for hand-drawing, it would be so wide that the spinner could not possibly keep the fibres so arranged as always to terminate in a point, from which she could draw, and she would be attempting to produce a yarn from a square-ended mass of fibres. She would probably draw first long and then short fibres from the bunch, and this again would cause uneven yarn and unequal strength. It would be, as nearly as handwork could be, the exact equivalent of drafting the sliver too much between two pairs of rollers.

To understand the question thoroughly, diagrams will be necessary to illustrate the different alterations which take place in the arrangement of fibres in the passage of sliver between two pairs of drafting rollers. For example, if a roving of 8 drams for 40 yds. is to be spun to 16 counts, there will be 1280 yds. of roving in every pound, and there are to be 6400 yds. of yarn—that is to say, a draft of five will be necessary. For the sake of illustration, it will be supposed that the sliver is composed of fibres 5 in. in length, besides equal quantities of shorter fibres. If the sliver be level and continuous, these 5-in. fibres must be arranged so that every fibre is overlapped by every other with considerable regularity. To represent a perfectly level sliver in diagram, the overlaps must be very regular indeed, as in Fig. 31. How much

each fibre overlaps is a matter of no moment, but the greater percentage of long fibres the greater will be the overlap. If there are equal numbers of 5-in., 4-in., 3-in., and 2-in. fibres in the top, it is clear that these short fibres must overlap less than those which are longer.

In a sliver of certain thickness (Fig. 31), with its fibres 5 in. in length, there is such a number of fibres that they overlap one another by 4 in., but if the sliver had been more drawn out at the previous box, it would of course have been thinner, and it is clear that any given group of fibres would overlap one another less (Fig. 32), so that their friction on one another is less, and the strength of the whole sliver less in proportion. If the arrangement shown in Fig. 31 is reproduced

FIGS. 31 AND 32.

with 4-in. fibres, it is clear that if there are the same number in a given length, they must overlap 25 per cent. less, so that after they have been drafted 4 to 1 the difference between them and the 5-in. fibres is more apparent (see Figs. 34 and 35).

It will be better to deal with the 5-in. fibres alone during their journey through the drawing rollers. The back rollers (**B R**, Fig. 33) hold all the fibres so tightly that none of them can move on one another, until their points reach the front rollers **F R**, one by one, just as they become free from the back rollers. As each in turn reaches the front roller it is moved 4 in. forward in the same time that the back roller pays out 1 in. The position is now greatly altered. Instead of an overlap of 4 in. there is now only an overlap of 1 in.; and as the process continues, each fibre is moved

the same amount in regard to the one which follows it, until the group is arranged as at Fig. 34. To understand the action of the 4-in. fibres they must be dealt with as if they existed quite apart from those 5 in. in length; and as the motion of the rollers is necessarily the same for all, each of them will be moved just as much in relation to one another as were the 5-in. fibres. This will mean that after drafting there is no overlap (Fig. 35), and there will therefore be no cohesion between any of the fibres in the group, because they have been drawn just so far that the

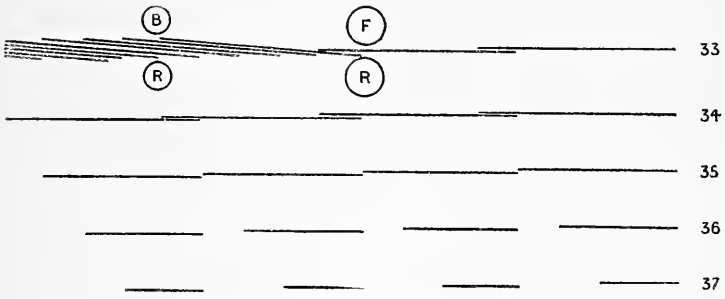

Figs. 33 to 37.

end of one will touch the end of the other. The relations of 3-in. and 2-in. fibres after drafting are shown in Figs. 36 and 37.

If a set of 5-in., 4-in., 3-in., and 2-in. fibres is grouped as they appear after drafting (see Fig. 38), a result exactly equivalent to the arrangement of fibres in a broken or lumpy sliver is obtained. It is quite clear how this arrangement is caused in a gillbox, where each faller holds all the short fibres until it drops. All the fibres are then set free together; but where there are no fallers, it is not so easy to see why the fibres from the front rollers arrange themselves in this way, and it is true that as the drawing process proceeds, the

irregular combination of long and short fibres occurs at less regular intervals, though each thick place is more clearly defined when it does come.

The diagram given in Fig. 38 is, however, very useful as offering an explanation of the accepted fact, that a sliver should not be drawn twice running in the same direction, for it is very easy to see that if the points of the 2-in., 3-in., 4-in., and 5-in. fibres all reach the front rollers together, as they would do if they were going in the direction of the arrow, they would all go through side by side, and the sliver would be pulled into pieces, which would be separated by distances of four times their own length (see Fig. 39). On the contrary,

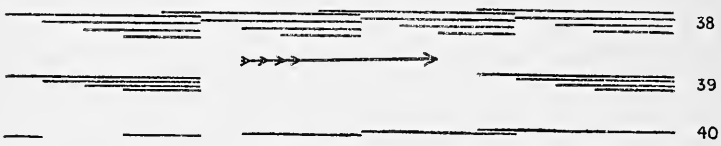

FIGS. 38 TO 40.

if the groups of fibres go to the rollers of the following box point first, their points will reach the front roller in such order that the 5-in. fibre will have travelled 4 in. before the 4-in. fibre has moved, so that after drafting they will be laid end to end, and there will be short gaps between the shorter fibres (Fig. 40), which does not, of course, give a continuous figure. All that can be said of it is, that when laid side by side with other similar figures, a sliver of some regularity will again be formed; and as there are a number of doublings at each box, nearly equivalent to the amount of draft, it is clear that the original thickness of the sliver will not be reduced much at each operation. Moreover, only the movements of a group of twenty-five of the component fibres of the top have

been followed, and as a section of a 4-oz. sliver of 60^s quality will contain 16,800 fibres, it is clear that this theory must be largely modified in its applications, although the lesson drawn from Figs. 39 and 40 cannot be overlooked.

The application to practice is summarized in a brief phrase in use in many Bradford mills, to the effect that "the draft and the length should be the same"; but it has been pointed out elsewhere that if the fibre were measured in millimetres instead of inches, the statement is entirely wrong, and the relation of the draft to the inches of length in some fibres is therefore purely accidental. For special counts, many wools will stand much more draft than is equal to their length in inches. Furthermore, the theory is hopelessly incorrect in regard to cotton, which is a shorter fibre without serrations; but in spite of these facts, it is well known that cotton 1 in. in length will easily stand a draft of 10. We are therefore under the unfortunate necessity of noting another difficulty for which no scientific solution has ever been offered, for careful readers will notice that this reasoning is based on an unproved axiom; and when the amount of overlap in the arrangement of the fibres is made different, some of the figures in the table of reasoning would have to be altered in proportion, although the general drift of the conclusions would be unaltered. It seems, therefore, quite impossible to sum up a theory in regard to draft, in terms that a scientific mind would consider accurate, but it is probable that no long fibre should ever be moved at one operation more than its own length in relation to all other fibres which lie contiguous with it, in the sliver as it goes through the back roller.

Ratch is the distance between the nip of the back roller and the nip of the front rollers, and if it is to bear any

proportion to the length of the fibres which are being treated, it must of necessity vary with every variation of length of material which is put into the machine.

The subject may be considered under four heads, according to the methods adopted for preventing the shorter fibres of the top from going through the front roller in groups.

1. By the use of fallers.
2. By the use of porcupines.
3. By the use of intermediate rollers or carriers.
4. By the use of three pairs of rollers.

1. Correctly speaking, accurate ratching is not of great importance in gillboxes, because in Botany qualities the fallers actually hold the wool for a considerable time after it is free from the back rollers, before it is caught by the front ones. The presence of the fallers also makes it impossible to set the back and front rollers within 8 in. of one another, and therefore the only thing which is necessary is to see that the distances from the back roller to the back faller, and from the front faller to the front roller, are always suitable to the length of the fibre which is being treated.

As the fallers do not hold the wool in a positive grip, there is not the same need for accurate adjustment at these points as there is in a roller drawing box, and the only rule that can be laid down is, that however long the wool may be, the distance from the front roller to the back roller must be decidedly longer. As the wool increases in length, the distance from the back roller to the back faller must increase in proportion. The relation of the front faller to the front roller seldom requires alteration, and except for unusually long wools, the front faller should always drop as near to the

front roller as possible, in order to prevent the shorter fibres from going through the front rollers in lumps.

2. Porcupines are used instead of carriers principally in what is known as French Drawing, for working dry combed tops. They take the place of fallers, and as they go into much less space, they are used in the smaller boxes of the drawing, which follow the first four boxes, where fallers are used. The porcupine roller is covered with pins very much like a carding roller; but the pins are needle-pointed, and are so arranged that they are vertical at the point at which they

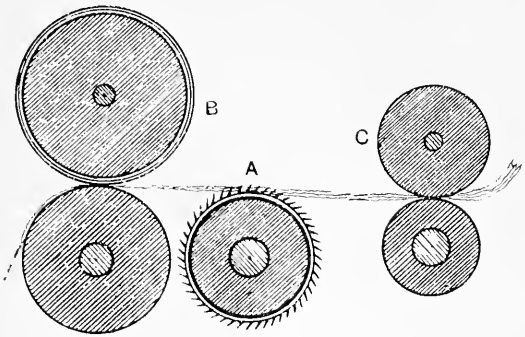

FIG. 41.

leave the sliver at **A** in Fig. 41. To attain this end it is, of course, necessary that they should be set at an angle to the radius, or at a tangent to a circle of about an inch in diameter, so that where the pins first come in contact with the sliver, they incline acutely towards the back roller. The fact that they meet the sliver at this angle prevents any tendency in the fibres to rise to the pin points, and makes it certain that all the long fibres will be drawn completely through the pins.

As in the case of fallers, the ratch must be considered in

two parts, provided always that the total distance from the nip of the front rollers **B** to the nip of the back rollers **C** is longer than any fibre in the top; that is to say, the distance from the back roller to the porcupine must not be so short that there is any chance of the pins tearing the fibres, whilst they are too closely packed together; and the distance from the porcupine to the front roller must be as short as possible, to prevent the short fibres going through in lumps after they are released by the pins. To meet these two requirements it is often necessary to have the porcupine set as near as possible to the front roller, and in that case the question of ratch between the back and front rollers will have to be considered very much as in an ordinary drawing box.

3. The third class of ratch is of much the greatest importance in worsted spinning, because it is the method used in all open drawing, and for all cap, fly, ring, and mule machinery, both for worsted and mohair.

If a top could be found which had all its fibres of one length, the ideal conditions for drafting and ratch would be secured, because the rollers could be set just so far apart that as soon as a 5-in. fibre was free from the back rollers, which are paying out 1 in. per second, it would be caught by the front rollers and moved 4 in. per second. In other words, the centre of the back rollers would be $5\frac{1}{4}$ in. or $5\frac{1}{8}$ in. from the centre of the front rollers, without any intermediate carriers. In such a case there would be no breakage of fibres; there could be no slipping, and consequently there would be no irregularity in the yarn. Unfortunately such a simple arrangement can never be used in practice, because all tops contain fibres of varying lengths; and if a top containing fibres from 5 in. to 2 in. in length were put through rollers $5\frac{1}{4}$ in. apart, it is

clear that the 5-in. fibres would continue to be drawn out in an even ribbon, each overlapping its predecessor by 1 in.; but if the 2-in. fibres are arranged in such a way that they overlap one another by 1 in. when they reach the back roller, it follows that four of them would be free from the back roller before the first one reached the front roller.

Leaving the friction of the 5-in. fibres out of account, all four of the 2-in. fibres would necessarily go through the front rollers together, by reason of their friction upon one another, and they would necessarily form a lump in the resulting sliver, as it came from the front rollers. No more short fibre would then go through the front rollers until 16 in. of sliver had been formed.

There can be no doubt that movements of this kind amongst the fibres of a sliver are the root cause of almost all irregularity in spinning, although friction and other things, which occur in practice, may affect the fibres so that these theoretical movements are very much modified; but the greater the difference between the longest and the shortest fibres, the greater will be the danger of unevenness in the yarn.

It is safe to say that no thread has the short fibres distributed evenly throughout it, but in practice they are prevented from going through the front rollers in lumps, by some means, in the absence of both fallers and porcupines. If a box were set with its front and back rollers just so far apart that the longest fibres would not reach from one to the other, and if in addition a pair of weighted rollers were introduced between them, in order to deal with the short wool; the short wool would be held in such a way by all the rollers that it would be made into a fairly regular sliver. This arrangement, however, would clearly divide the one ratch of 5 in.

into two ratches of $2\frac{1}{2}$ in. long; and whether the intermediate roller ran at the speed of the back roller or of the front roller, or at a speed between the two, it is clear that every fibre which was longer than $2\frac{1}{2}$ in. would be broken in the process, and the spinning power of the top completely ruined.

It is necessary to have some roller which will prevent the short wool slipping, but the breakage of long fibres has to be avoided at all costs, and the method adopted is a compromise. A pair, or more generally two pairs, of small rollers are introduced between the back and front rollers, as shown in

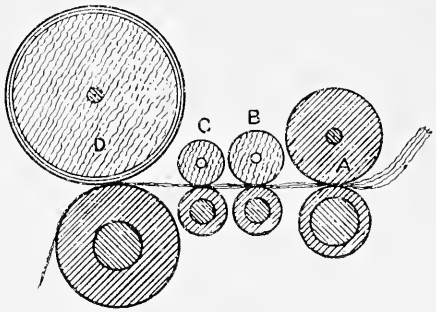

Fig. 42.

Fig. 42. These rollers, or carriers, as they are called, do not grip the fibres tightly. They are of such small diameter that the back and front rollers can still be set within 5 in. of one another if necessary. The upper carriers, or tumblers, are nearly always made of wood, and they are consequently light in weight. They are just heavy enough to prevent the short fibres being moved forward by the friction of longer fibres, moving near them, but their pressure is not sufficient to prevent the long fibres being drawn right under them, as soon as the points of the fibres are clear of the back roller and reach to the front one. In other words, the carriers have

sufficient nip to retard the movements of fibres caused only by the friction of other fibres upon them, but not enough grip to hold or break fibres which are being drawn by the front roller, or held by the back roller.

In Fig. 42, **D** shows the point where the front rollers meet. This point is always known in the trade, as the nip. **C** is the nip of the first pair of carriers, **B** the nip of the second pair of carriers, and **A** the nip of the back rollers. If the distance from **A** to **D** is $5\frac{1}{8}$ in., it is clear that as soon as the 5-in. fibre is free from **A** it will extend past **B** and **C** and be caught by **D**. There will be no time for any movement of one fibre upon another, except that which is caused by the rollers themselves, exactly as in the case of the theoretical example where no carriers were used. But in that case all the short fibres were affected by the movement of the long fibres in such a way that they went through the rollers in lumps.

After carriers have been introduced, the motion is much more regular. In practice the short fibres will be affected to some extent by the other longer fibres; but for the sake of argument it will be supposed that they move as if they were affected only by the rollers and by fibres of their own length. If the distance from **A** to **B** is $1\frac{3}{4}$ in. and the fibres overlap each other by 1 in. as in the other case, every fibre will remain fast in the nip **A** until the fibre before it has reached **B** and has been drawn out another $\frac{1}{2}$ in., because the draft of **B** on **A** is about $1\frac{1}{2}$. The original overlap at **A** is now reduced from 1 in. to $\frac{1}{2}$ in., and if **C** has a draft of 2 on **A**, the fibres will be end to end after passing that point. As each of them is released by **B** it is caught at **D**, and the distance between the fibres is regularly extended, according to the amount of draft between the rollers.

Now comes the important point. If the distance from **C** to **D** is less than 2 in. there can be no slipping of the short fibres, because the carriers hold the wool firmly enough to prevent their moving on one another, until they are caught by the front rollers. If, also, there is a draft of 4 between **A** and **D**, every 2-in. fibre will be moved 4 in. before the tip of the next 2-in. fibre reaches the front roller, and the 2-in. fibres will then be lying in a row, on the ribbon of 5-in. fibres with just 2 in. between their extreme points.

If any reader cares to work out the movements of the 3-in. and 4-in. fibres, he will find that the tips of the 4-in. fibres will just touch one another, and the tips of the 3-in. fibres will be 1 in. apart, after they have gone through the same machine. None of these sets of fibres, excepting the 5-in., will make a continuous figure, but it is clear that relatively, each length will be distributed as regularly through the sliver, after drawing, as it was before the operation; and when the fibres are again grouped together, with the other fibres forming the sliver, there will be no preceptible irregularity. It must also be remembered that every alternate box draws from opposite ends of the sliver and fibre, and therefore the effect described under gill box drafting will ensue in a modified form, each succeeding process tending to undo any grouping of the fibres which has resulted from the one before it.

The whole of the question might have been discussed under the head of drafting, but its bearing on the question of ratch is of even greater importance, and for that reason it has been reserved for this place, because it must be clear to any thinker, that if the component ratches do not bear the right relation to the length of the shortest fibre in a top, it

is certain that the short fibre will not be evenly distributed in the yarn. It may not be uneven enough to cause visible lumps, but it cannot be so perfect as it ought to be. Take, for example, the case of a crossbred top with fibres varying from 8 in. to $1\frac{1}{2}$ in. in length. The distance from **A** to **D**, Fig. 42, must now necessarily be extended to 8 in. or the long fibres will be broken; and if two pairs of carriers are used, it is clear that the length of each of the component nips must be $2\frac{2}{3}$ in. But any two $1\frac{1}{2}$-in. fibres overlapping one another by only one 1 in. extend $2\frac{1}{2}$ in., and therefore two of them will be free from **A** before the point of the first arrives at **B**, and the two will consequently slip forward together, leaving a long gap before the next short fibres come through to **B**. To draft such a top, it is *theoretically* necessary to use three carriers, so that none of the ratches is greater in length than the length of two fibres as they lie overlapping one another in the sliver.

This argument is based on the supposition that they overlap by 1 in., whereas it is much more probable that they overlap by a much greater proportion of their length, and in that case, the component ratches would need to be shorter still. It needs no demonstration to show that with three pairs of carriers or four ratches, each of them will be reduced to 2 in., and there will be no chance of the short fibres going through in bunches, as they were shown to be likely to do, with only two carriers and three ratches each $2\frac{2}{3}$ in. long.

4. The use of the three pairs of rollers, each having a definite grip on the fibre, and each moving the fibres forward on one another, to a definite extent, is a subject which does not properly come within the scope of this work, because it has never been applied to worsteds, and it is a noticeable

exception to the fact that in both cotton and wool, fibres are never drafted twice in the same direction.

Whenever three pairs of rollers are used, as shown in Fig. 43, the central pair, which take the place of carriers, are entirely different from carriers, because they have a definite grip on the wool, and really form, at one and the same time, the front rollers of one drafting process and the back rollers of a second. It is noticeable that in the cotton trade, there is an exception to the rule so universally accepted in worsteds, and it raises the question as to whether in worsted, the general principle at present in vogue, might at

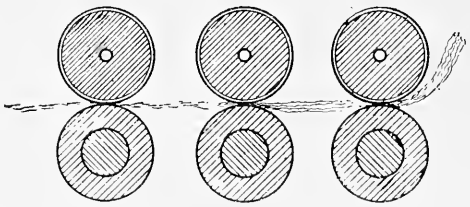

Fig. 43.

times be modified with advantage and with reduction in cost of production.

Take, for instance, a case where cotton $1\frac{1}{4}$ in. long goes through the drawing with an average draft of, say, 10. By the same rules one would expect that it would be drafted to very nearly the same extent in the mule, but it is well known that in recent years, it has been possible greatly to exceed these figures, and a draft of 16 is not an unheard-of thing. This draft of 16 would really be composed of two consecutive drafts, of 2 and 8 respectively, in two entirely separate ratches, each of which would be slightly longer than the fibres under treatment. The absence of carriers between

each pair of draft rollers is solely due to the impossibility of putting them in, without greatly lengthening the ratch; therefore, if the system were applied to the worsted trade, a set of three pairs of rollers with four pairs of carriers would be necessary, and the draft of the first group would probably be shorter than the draft of the second.

It is known to many persons that excessively long drafts can at times be made satisfactorily without apparent risks, in special weights of worsted yarns and rovings; and as the double ratch has been found to make still longer drafts possible in cotton, without sacrificing anything in evenness, it is highly probable that the number of cases where long drafts can be applied in worsted might still be increased, by some modification of the method used for cotton.

The value of the foregoing theories to the reader depends on his ability to use them rather as a means to an end than as an end to themselves. Many of them have been proved again and again beyond dispute; but in the more involved cases it is very difficult to collect sufficient evidence, owing to the natural disinclination of one spinner to place his facts in the hands of another. The results must, therefore, be taken simply as the work and conclusions of one man, based on the best information available, and they will be of the most value to the reader who confirms them by his own experiments, before putting them into practice. If any one can prove that the conclusions are based on incorrect assumptions he will do himself even greater service, for he will then be in a position to avoid some errors and consequent bad work, with certainty, and this could not fail to give him a distinct advantage in these days of severe competition.

CHAPTER V

DRAWING

Drawing is a term applied to the series of processes, by means of which a worsted sliver from the comb is reduced to such a size that it can be drawn out in the spinning frame, at one operation to the desired size of yarn.

For example, a botany top will weigh about 4 oz. for 10 yds.; it is to be made into yarn of, say, 60^s counts, and it will only stand a draft of 5 or 6 in the spinning frame. To find out how much it must be reduced, in order to be suitable for this purpose by present methods involves a comparatively intricate calculation.

A roving which will make 60^s with a draft of 5 must be:—

$\frac{60 \times 560}{5}$, or 6720 yds. per pound.

$\frac{6720}{16 \times 16}$, or $26\frac{1}{4}$ yds. per dram or $\frac{4}{105}$ drams per yard.

$\therefore 40 \times \frac{4}{105} = 1{\cdot}5$ dram in 40 yds.;

and the relation between 1·5 dram in 40 yds. and sliver of 4 oz. in 10 yds. is the amount of reduction necessary in the drawing process.

It is a clear proof of the conservatism of this country, that we are prepared to go on using such time-worn systems of

calculation. There are many items in the textile trades where the calculations necessary to arrive at a desired result are so complicated, as to mystify even competent persons, if they are not intimately acquainted with the industry; but it is probable that nowhere else are denominations used, which are so wasteful of time, as are those required to take a top through the drawing to the spinning. In that range there are five points where the definite relation of weight to length must be known; and not content with the complication involved in the use of pounds, ounces, drams, grains, and hanks of 560 yds., it is thought necessary to alter the denominations, at different stages, from length to weight, or *vice versâ*.

The sizes of tops are stated in ounces for 10 yds. At the first and second weigh-boxes, the length of sliver on a bobbin (which is an irregular length, such as 458 yds.) is divided into its weight in pounds and then reduced to the number of drams in 40 yds. Roving is weighed in lengths of 40 yds., the weight being stated in drams. For yarn the weight is fixed at $12\frac{1}{2}$ grs.; the number of yards in that weight being the same as the count. It might be interesting to find the origin of these various figures, but the practical man is only concerned to find a system by which he can tell at sight how much draft is needed to reduce tops to rovings, and rovings to yarn; and if a decimal system (not necessarily metric) were brought into general use, this could be done with the utmost simplicity, and with great saving of time and trouble.

Based as our present system of counts is, on a pound weight and a curious multiple of yards, as a standard of length, it goes without saying that either the standard count

must be altered, or some other weight must be substituted for the pound, simply because neither it, nor the standard of length can be subdivided into satisfactory decimal parts.

If a pound is retained as the standard weight by which to measure tops, drawing slivers, rovings and yarn; one thousandth part of it would become the standard for yarn weighing.

But $\frac{1}{1000}$ of a pound is 7 grains or $\frac{7}{12{\cdot}5}$ or $\frac{14}{25}$ of a $12\frac{1}{2}$ grain weight, and this would necessitate an alteration of the standard count, far more revolutionary than an alteration to the French metric system.

If, on the other hand, it is absolutely necessary to retain the present standard of length, it is clear that the pound as a standard of weight must be altered, and that multiples of $12\frac{1}{2}$ grs. must be adopted instead. This would be very inconvenient, as the pound would have to be replaced by $1000 \times 12\frac{1}{2}$ grs. or 12,500 grs. which is about 1·8 lb. Such a system would need an entirely new set of weights, of a type not at present in existence, and it is therefore a system which cannot be recommended, because it would be quite impossible to sell by a system not in vogue in our own, or in any other country.

By adopting the standard metric system, all such difficulties will be done away with. The weights can easily be bought without trouble, and the simplest of all methods could be adopted, if the trade would consent to have the standard of count altered by about 12 per cent.; that is to say, a gram (of $15\frac{1}{2}$ grs.) would replace our $12\frac{1}{2}$ grs. weight, and yarn which we call 60^s with 33,600 yards to the pound, would have in future to be called $67{\cdot}7^s$, because it would contain 67·7 meters per gram. Roving from which to spin it with a draft

of 6, would be called 11·3, which is 67·7 divided by 6, and tops which are now measured as 4 oz. in 10 yds. would be known as 80^s, that is to say there would be 80 meters in a kilogram.

Until the metric system is universally adopted by the trade, it would, of course, be necessary to translate orders received from outside firms into the new system of counts, before booking them in the mill order-books, and figures for skep labels and invoices would need altering back to the old system; but as every count would bear a direct proportion to every other of the old system, in the proportion of 60 to 67·7, it would only be necessary to use the table given herewith, to read the equivalent of every metric count at a glance.

TABLE OF WORSTED AND METRIC COUNTS.

Bradford counts.	Meters per gram.	Bradford counts.	Meters per gram.	Bradford counts.	Meters per gram.
12	13·54	42	47·40	72	81·25
14	15 80	44	49·66	74	83·47
16	18·04	46	51·91	76	85·76
18	20·31	48	54·14	78	88·03
20	22·57	50	56·39	80	90·28
22	24·82	52	58·68	82	92·49
24	27·07	54	60 94	84	94·80
26	29·34	56	63·20	86	97·00
28	31·60	58	65·41	88	99·32
30	33·85	60	67·71	90	101·57
32	36·09	62	69·93	92	103·82
34	38 37	64	72·18	94	106 03
36	40·62	66	74·48	96	108·28
38	42·88	68	76·74	98	110·54
40	45·14	70	79·00	100	112·80

To find the number of meters in a kilogram, multiply
English counts × 560 × 2·014, or 1127·84, say 1128.

There is no doubt that such a scheme would be unpopular at first; it would, in fact, require a new method of looking at things, and Englishmen seldom favour changes, even for

the better, if novelty of method is involved. It is certain that it would effect a saving in spite of the necessary alteration of figures, and if any master will trouble to work out for himself the complete set of drafts and doublings for a set of drawing, with the additional drafts from three different weights of rovings, for six different counts; first using the old and then the new methods, there is small doubt that he would very soon turn reformer.

The cumbersome calculations for finding the draft from roving to yarn, is so typical of all the other calculations in a drawing, that there is no use wasting time in describing a method so involved; and all that has to be said on this complicated subject will therefore be stated in meters and grams.

The metric system is now so universally used by scientists and chemists all over the world, that no apology is needed for its adoption. It effects immense saving in nearly every type of calculation for which figures are used, and for that reason it is almost certain to be adopted sooner or later by every civilized nation, as it already has been by France, Germany, Austria, and many others. Measures of length, bulk, weight, and fluid capacity are all related to one another in this system, and are all based on the meter, which is a measure of length equal to 39·3708 English inches. This length was selected as being one-ten millionth of the earth's quadrant, measured from pole to equator, and also because it is a length useful in itself, and very suitable for subdivision into hundredths and thousandths. In use, the meter is divided into tenths, hundredths, and thousandths, under a name derived from the Latin, whilst multiples of the meter are indicated by Greek prefixes.

Thus a kilometer	is 1000 meters	or	1093	yards.	
„ meter	„		39·3708	inches.	
„ decimeter	„ $\frac{1}{10}$	of a meter or	3·9370	„	
„ centimeter	„ $\frac{1}{100}$	„ „	0·3937	„	
„ millimeter	„ $\frac{1}{1000}$	„ „	0·0393	„	

The standard of bulk both for fluids and solids is a cubic centimeter, which is always written, and often spoken of, as c.c.

The standard of weight is a gram, which is the weight of one c.c. of water at its greatest density (*i.e.* at 4° centigrade).

A cubic decimeter (being equal to 1000 c.c.) is therefore equal to 1 kilogram, and as a measure of capacity for liquids it is known as a litre. A litre ($1\frac{7}{10}$ pint) therefore weighs 1 kilogram.

Names derived from Greek numerals are used for all multiples of the gram, and prefixes derived from the Latin indicate its decimals.

Thus a kilogram	is 1000	grams	or 2·204	lbs.	(avoir.)	or 35·273	oz.	or 15,432 grs.
„ hectogram	„ 100	„	0·220	„	„	3·527	„	
„ dekagram	„ 10	„	0·022	„	„	0·352	„	
„ gram	„ 1	„	0·002	„	„	0·035	„	or 15·432 grs.
„ decigram	„ $\frac{1}{10}$	„					„	1·543 „
„ centigram	„ $\frac{1}{100}$	„					„	0·154 „
„ milligram	„ $\frac{1}{1000}$	„					„	0·015 „

For the conversion of English units into metric, the following figures are useful :—

1 lb.	= 453·6 grams.	1 yd.	= 0·914 meters.
1 oz.	= 28·35 „	1 ft.	= 0·3048 „
1 fluid oz.	= 28·35 „	1 in.	= 0·0254 „
1 pint	= 567·93 „ or c.c.		
1 dram	= 1·77 „		
1 grain	= 0·0648 „		

Fluid and solid measures will not concern us in this treatise, but in calculations of drafts, the meter will be used instead of the yard or hank, and grams instead of grains, drams, ounces, and pounds.

Standard Bradford 60^s yarn contains 60 × 560 or 33,600 yds. in a pound. This multiplied by 0·914 gives 30,723 meters in a pound; and again multiplied by 2·2046 we have 67,715 meters in a kilogram, or 67·715 metres in a gram.

In other words, to reduce yards per pound, into meters per kilogram, it is only necessary to multiply by 2·014, and the reduction from one count to another may be made in one line of fractions thus :—

$$\frac{60 \times 560}{1} \times \frac{36}{39{\cdot}4} \times \frac{1}{453} = 67{\cdot}684$$

the small difference (0·02 of a count) being due to the fact that in the fraction, only one decimal point is used instead of the three used in the decimal method.

Before proceeding to compare the relative sizes of sliver from all the different boxes in a drawing, it is necessary to have a list of the standard sizes of top sliver stated in meters per kilo. These are—

Sliver	4	oz. in	10	yds.	= 40	yds. per pound	= 80·5	meters per kilogram		
,,	5	,,	10	,,	= 32	,, ,,	= 64·4	,,	,,	
,,	6	,,	10	,,	= 26·6	,, ,,	= 53·6	,,	,,	
,,	7	,,	10	,,	= 22·8	,, ,,	= 45·9	,,	,,	
,,	8	,,	10	,,	= 20	,, ,,	= 40·2	,,	,,	
,,	9	,,	10	,,	= 17·8	,, ,,	= 35·8	,,	,,	
,,	10	,,	10	,,	= 16	,, ,,	= 32·2	,,	,,	

We are now in a position to state the size of the sliver in every box of the drawing process, in figures of the same denomination; that is, to state the number of meters of sliver, as it comes from each box, which is equal to 1 kilogram in weight, and if the reader will remember that in the final result 67·7 metric counts, are equal to the 60^s of the trade, he will have no difficulty in forming conclusions

which are quite impossible, until all the figures do bear a visible relation to one another. In speaking of the number of meters of sliver or yarn in a kilogram, no decimal points will be used, and as a rule the product of all boxes prior to roving will be so stated, whilst the weights of roving and yarn will be stated in the number of meters in a gram, the figure here being followed by a decimal point.

As in all other parts of this book, the figures used as examples in this chapter have been obtained with all possible care, as representing the best usages of the trade; but as is the case in all other departments, the drafts used by one firm differ so widely from those used by others, for exactly the same purpose, that no one set of figures can be taken as conclusive. All must be regarded as a criticism of existing methods, rather than a proof, that any one of them is the best that can be devised.

In the most approved methods of botany drawing for 60^s counts and above, it is customary to have ten processes, in each of which two or more slivers are put side by side, and are then drafted as much as they will stand, without what is known as "breaking;" that is, without making uneven sliver, in which the unequal distribution of short fibres causes lumps at intervals.

In order to make clear the reason for several alterations which are necessary in practice, it will be best to begin by considering a simple instance of super Australian wool, of such good and uniform length, that it will stand a draft of 6 in every process.

In the top there are 80 meters per kilo.

And in the yarn there are to be 60 meters per gram.

To find the weight of roving necessary under the old system

of drams in 40 yards, from hanks per pound of yarn, we had to go through considerable calculation. Now, knowing that we want to spin our yarn with a draft of 6, we simply divide the counts by 6 to get the desired weight of rovings, which will of course be 10, or 10,000 per kilogram, and therefore $\frac{10,000}{80}$, or 125, is the amount of reduction which must be made in the 10 boxes; but as there are drafts of 6 in each of the 10 processes, the total draft of the set will be equal to 6 multiplied by itself 10 times, which gives a figure no less than 60,466,976, and therefore to get the necessary reduction, the doublings must be equal to that figure divided by the total reduction wanted, that is by 125. This gives 480,000, a figure which can, of course, be made up of many multiples, and it must be obvious to any reader that these 10 multiples might be arranged in any order, and might be altered very widely. In practice they almost always occur in an order which has been evolved as convenient, without much regard to any regularity of progression.

	TABLE I.				TABLE II.		
No. of process.	Name of box.	Ends up.	Draft.	Weight of sliver.	Ends up.	Draft.	Weight of sliver.
1	1st gill . . .	5	6	97	6	6	80
2	2nd gill . .	5	6	118	5	6	97
3	Spindle gill .	5	6	142	5	6	118
4	1st drawing .	5	6	170	5	6	142
5	2nd drawing .	4	6	255	5	6	170
6	3rd drawing .	4	6	382	4	6	255
7	Finishing . .	4	6	573	4	6	382
8	Slubbing . .	3	6	1,146	2	6	1,146
9	Reducing . .	2	6	3,438	2	6	3,438
10	Roving . . .	2	6	10,314	2	6	10,314
				16,635			16,142
Total spindles in the set . .				414	. . .		404
Total doublings				480,000	. . .		480,000
Total draft				60,466,976	. . .		60,466,976

Tables I. and II. show calculations for botany drawings with the same number of doublings and the same amount of draft, the size of sliver being stated in metres per kilo., but there is a slight difference which needs careful consideration. In practice it is common to suppose that if the total drafts and doublings of two drawings are equal, the result must be equally good, but this is certainly not always the case.

To compare the advantages and disadvantages of the two systems, it is first necessary to notice that the output of the front rollers of every box in a set of drawing is so nearly alike that the result may be regarded as equal. It may therefore be said, that the number of spindles in each operation will be in direct proportion to the size of the thread coming from them, and because this is the case, the figure which is obtained by adding together the weight of sliver from the various boxes, will always be very nearly in proportion to the total number of spindles in the whole drawing. For example, in Table II. to find the number of spindles or rollers in the first 2 sliver box 80 must be divided by 40, and in like manner 16,142 divided by 40 gives 404. On this basis Table II. would be less expensive in first cost of machinery, in rent and in wages, because fewer spindles are necessary; and the only drawback to set against this is the fact that the sliver from the first box is the same size as the top, because there has been no reduction. For these reasons, there are only two instead of three doublings in the slubbing.

It is not at all unusual to adopt this method of doubling at the first box, to secure a certain desired weight at the weigh-box. In fact, it often happens that the sliver from the first box is actually made thicker than the top, and it is not clear that any serious harm will result from this treatment, but

perfection is said to be made up of trifles, and if we adopt Euclid's method of treating doubtful problems, by carrying them to extremes, we see plainly enough that, not only is Table II. imperfect, but probably Table I. is not as good in theory as is the system given in Table IV.

TABLE III.					TABLE IV.		
No. of process.	Name of box.	Ends up.	Draft.	Weight of sliver.	Ends up.	Draft.	Weight of sliver.
1	1st gill . . .	6	6	80	4	6	120
2	2nd gill . .	6	6	80	4	6	180
3	Spindle gill .	6	6	80	4	6	270
4	1st drawing .	6	6	80	4	6	405
5	2nd drawing .	6	6	80	4	6	608
6	3rd drawing .	6	6	80	4	6	912
7	Finishing . .	5	6	96	4	6	1,368
8	Slubbing . .	2	6	288	3	6	2,736
9	Reducing . .	1	6	1,728	3	6	5 472
10	Roving . . .	1	6	10,368	3	6	10,944
				12,960			23,015
Total spindles in the set . . .				324	. . .		575
Total doublings				466,560	. . .		442,368
Total draft				60,466,976	. . .		60,466,976

If there is no special advantage in reducing the size of the sliver at every operation, there seems to be no particular reason why it should be reduced at all, until the last three boxes of the set are reached (see Table III.) Such an arrangement would clearly have the great advantage of requiring only two spindles in each of the first seven boxes, six spindles in the slubbing, 36 in the reducing, and 216 in the roving. There would be, of course, great saving in the first cost and in wages; but no man in his senses would expect to get good work by such means, for it may be taken for granted that after a top leaves the last combing gill box, it is nearly as

uniform in thickness as any process can make it, and consequently, when it reaches the seventh drawing process it will not be one whit better for all the work that has been done to it.

If there is any truth whatever in the previous assumption in regard to drafting, some of the fibres are drawn quite apart from one another in the process, and power of adhesion in the sliver depends on the number of other fibres present in the box itself and on the number of reduced slivers, or doublings, which are put up to the next process. If the number of fibres present in a 60^s thread spun from a low 60^s quality are counted at a number of places and averaged, it will be found that the thread generally contains about 20 fibres side by side; a roving of six times the weight must contain 120 fibres, and a top, being about 125 times the weight of the roving, must contain 15,000 fibres on any section. That is to say, six ends each of 15,000 fibres are put up to a gill box having a draft of 6, and a sliver of 15,000 fibres is the result. This means, that to avoid irregularity due to the unequal distribution of long and short fibres, at least five of these slivers are put up and drafted six in order to reduce their size to 12,500 fibres.

Further down the drawing, with a total disregard for logic, a different method is adopted: when the sliver only contains 2160 fibres it is still drafted to the same extent, so that it will only contain 360 fibres after the process. The chances of irregularity must be enormously increased on account of the great reduction in the number of the fibres, and yet the irregularity is only counteracted, by putting up two ends to the roving box in place of the five which are put up when the slivers are so much thicker.

It is very seldom that any advantage can result from a

drawing process in which there are so many doublings that the resulting sliver is as thick, or thicker than the original. It is probable that most perfect evenness would result if the percentage of reduction could be made the same in every box of a set (see Table IV.); and as it is impossible for all to be alike, theory advises that the later boxes, where the fibres in each sliver are fewer, should have as many doublings as possible.

The difficulty in the way is largely one of expense, for it is easy to see that if the order of doublings in Table I. were reversed, the number of roving boxes required in both would be the same; but the number of reducers, slubbing boxes, and finishing boxes would be so enormously increased, that the cost of machinery, rent, and wages would be very much raised, and would be out of all proportion to the advantage which would be gained by any slight possible improvement in evenness. Practical men have good reason for knowing, also, that expense is not the only drawback which has prevented the adoption of a uniform system of reduction throughout all the drawing processes, for they are too well aware of the difficulty caused by piecings in the slubbing, reducing, and roving processes. If the number of ends up, in each of these processes were increased to four or five, there is no doubt that the difficulty of keeping them free from thick joining places would be increased out of all proportion to the increase of ends used; and such careful attention would be necessary on the part of the hands, to keep the work free from thick places, that there would be very small chance of obtaining really perfect work.

Present methods are a compromise between the least expensive course, and that which would be the best in theory.

If a spinner has the choice of increasing the number of ends or reducing the draft, in order to get a thicker roving, he should try as far as possible to increase the number of ends in the later processes. It is also well to remember that the output of a drawing can be enormously increased by the increase of drafts, for there is no mechanical limit to the amount of draft possible, as there is to the speed of a spindle, and it is also clear that the greater the draft the fewer are the processes necessary to reduce top to a given weight of roving, at the same time retaining the full number of doublings. Thus, in a crossbred with a draft of 10 throughout, only eight processes are required to obtain 1,024,000 doublings and a total reduction of about 100 times.

TABLE V.

DRAFTS AND DOUBLINGS. CROSSBRED DRAWING.

No. of process.	Name.	Ends up.	Draft.	Weight of sliver.
1	Can gill . . .	8	10	50
2	Spindle gill .	8	10	$62\frac{1}{2}$
3	1st drawing .	8	10	78
4	2nd drawing .	8	10	97
5	3rd drawing .	5	10	194
6	Finishing . .	5	10	388
7	Slubbing . .	5	10	776
8	Roving . . .	2	10	3880
				$5525\frac{1}{2}$

Total spindles	138
Total doublings	1,024,000
Total draft 10^8	100,000,000

There are two discrepancies to be noted between the tables given and the drafts which are in daily use.

1. For obvious practical reasons the draft cannot remain exactly alike throughout the whole set. There are always at

least three points where the weight of sliver must always be of a size that can be stated in round figures, which are easy to compare with others. For instance, instead of the 142 in the first drawing-box of Table I., it might be necessary to have 140 in practice; and as this number could never be obtained by altering the number of ends up whilst retaining a draft of 6, the ends are allowed to remain the same, and the draft is made 5 and a fraction instead of 6. For the sake of simplicity, similiar drafts are often adopted all through a set of drawings, and it also often happens that it is necessary to alter these drafts very slightly at the weigh boxes, partially because it is found impossible to make tops sufficiently regular to avoid their showing slight differences after drafting, and partly because they always lose a certain percentage of their weight through evaporation in the process. The amount of loss differs with different conditions of the atmosphere, and this difference has to be made up by alterations in the draft.

2. Practical drafting differs from the theoretical examples here taken, in that the drafts are deliberately allowed to increase as the process continues, so that the attenuation of the sliver at each of the smaller boxes is greater than that shown in Table I. In other words, the drafts rise as the number of doublings fall, and instead of making a steady reduction from gill box to roving, as shown in Table IV., the increase is very slow in the early boxes, and unnecessarily rapid in the roving and spinning.

Too much twist is a great mistake, for two reasons. Firstly, the total speed at which it is possible to run the box is generally determined by the speed of the flyers: but an increased amount of twist means more revolutions of the flyer to every revolution of the front roller, and therefore the

addition of twist in any process must mean a reduction in the output of the front rollers, and an equal reduction in the output of the whole drawing. In the second place, excessive twist may have a much more serious effect than that of merely limiting production, for it is clear that twist makes the fibres adhere more firmly to one another than they do in untwisted sliver; and if too much twist is inserted, they may hold so tightly to one another, that the drawing rollers will not be able to draft the fibres uniformly. In extreme cases there could be no drafting, properly so called; the hard twisted sliver would be simply pulled into short pieces by the front roller. Such a thing as this would, of course, never be allowed to take place to any great extent in practice; but the spinner should remember that if there is too much twist in any process the drafting will not be regular. Uneven drafting on account of twist is often termed "plucking," because the motion of the fibres on one another is spasmodic, instead of being perfectly smooth and regular. The result is certain to be visible in the sliver, in places of unequal thickness occurring with more or less regularity along the sliver, and varying in intensity according as the plucking is severe or so slight as to be unnoticeable.

First Process: Can Gill Box.—As the theories of gill boxes have been considered in detail in regard to combing they will only be briefly recapitulated here, and the box will be considered simply as a means of reducing sliver to any desired extent, with the greatest possible evenness and cheapness. The drawing gill box consists:—

1. Of a creel from which the balls of top are unwound (see Fig. 44).

2. Back rollers which pay out a certain length of sliver (**A**, Fig. 46).

3. Fallers which prevent the fibres being drawn too rapidly by the front rollers (**B**, Fig. 46).

4. Front rollers which draw out the fibres to such an extent that the sliver is reduced to a definite extent (**C**, Fig. 46).

5. Calender rollers which pay the sliver into the can (**D** Fig. 46).

6. A knocking-off motion, which stops the machine as soon as the required amount of sliver has been paid into the can (Fig. 49).

1. *The Creel* is designed to overcome two difficulties which cause trouble if work is attempted without it. If tops are laid on the floor, there is very seldom any difficulty in drawing a sliver from the centre of the ball, and fibres from other adjacent portions of sliver do not adhere very much; but when a sliver is drawn in this way it always contains twist. If the amount of twist were constant, this would not be a very serious matter, but as the length of one lap round the ball varies from the centre of the ball to the outside, and as one turn of twist runs into the sliver for each wrap round the ball, it will be found that a sliver drawn from the centre of the ball in this way, contains varying amounts of twist.

By making the ball rotate with a uniform surface traverse, the creel makes it possible to take sliver from the top, without any twist at all. Whatever may be the diameter of the different tops on the creel, it will pay out sliver from every one of them at a uniform speed, so that all the fibres go up to the back rollers without having had any strain put upon them; consequently the slivers never break down and are never strained. Various methods have been tried to obtain

this result, but none of them have been so efficient as that shown in Fig. 44.

Any method by which a skewer, or other artificial axis is put through the centre of the ball is bound to disarrange and probably to damage the sliver near the centre of the top, and it is of course impossible to apply any motion to such spindles, which would pay out the sliver at rates varying in direct relation to the diameter of the ball. It is also very

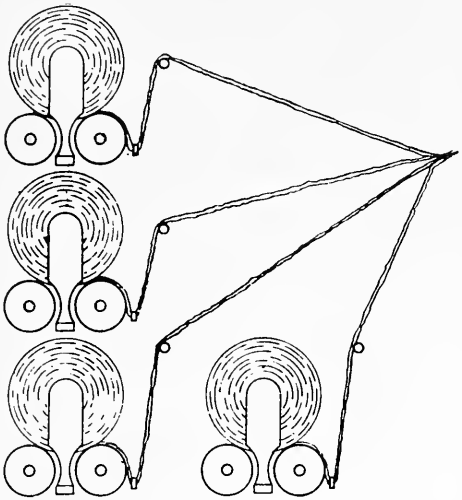

Fig. 44.

seldom that all the sliver, so skewered, would run off the spindle, and it is quite clear that the sliver would have to bear sufficient strain to make the top rotate. The form in which the rollers are arranged in the illustration is only a matter of convenience; it is the usual type and occupies but little room.

In principle the machine is simplicity itself; the rollers are arranged in pairs, each pair being long enough to hold

three or four balls standing on their edges, prevented from rubbing one another, and prevented from falling over, by thin polished steel plates. The rollers are made to rotate by chain or wheel gearing at the same surface speed as the back rollers. They really form the low rollers of a nipping pair, of which the ball itself is the deadweighted upper roller, so that the sliver from the top must continue to emerge from the nip between the ball and the rollers at a uniform speed, no matter what may be the size of the ball itself. The sliver will also be delivered without twist and without any tension being applied to it from the back rollers.

There is only one possibility of difference in the output of different balls running on the same creel. Any such difference must be due to the angle at which the balls are wound. If a ball were built without traverse, its output would be exactly equal to the surface traverse of the roller, but as the wraps lie diagonally round the ball they are necessarily rather longer than they would be if they lay straight round its circumference, and it follows that each time the ball completes one revolution on its axis, it pays out a length of sliver which varies according as the traverse has been quick or slow when the ball was being built.

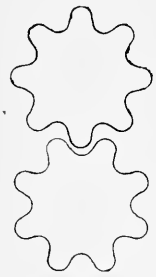

Fig. 45.

2. *The Back Rollers, Fallers, and Front Rollers* are best considered in one group, because they perform together the most important function of the box, that of drafting.

The back rollers are nearly always a single pair of tooth and pinion rollers as shown in Fig. 45, and they usually work without a leather. Sometimes, for botany wool, two smooth low rollers are employed with

a single large pressing roller, covered first with thick cloth and over that with soft leather. Such a set of rollers would naturally deliver a length almost exactly equal to the circumference of the low rollers, whereas the tooth and pinion rollers nearly always deliver more than $3\frac{1}{7}$ times their diameter, and the amount they deliver also varies with the thickness of the sliver and the pressure applied to them.

The amount of reduction effected by each gill box depends entirely on the output of the back rollers as compared with the output of the front rollers. This is the total draft of the box, and is the multiple of the back draft, between the back roller and the fallers, and the front draft between the fallers and the front roller.

The speed at which a gill box can be run depends on the number of the fallers which can be dropped in a given time without breakage, and this speed depends entirely on that of the screws and cams which move them. Breakages always occur where fallers drop, or rather where they are forced down by the cams of the upper screw.

For many years, the threads in both upper and lower screws were cut single, because no one was then able to make a double thread screw, which worked well. It must be clear that if there are two threads side by side, instead of one, a single revolution of the screw will move each faller twice the distance which it would be moved by one rotation of a single thread screw, and that, without increasing the speed at which the cams revolve. As a matter of fact, it is seldom found desirable to drop fine fallers at twice the speed which is possible with a single thread screw.

Many boxes with single screws of three-eighths pitch were run up to 300 per minute. If the face of the cam on such a

PARTICULARS OF CAN GILL BOXES.

First and Second Processes.

	For 60s botany.	For crossbreds.
Number of boxes	2	2
Length and breadth over all	4′ 6″ × 4′ 2″	4′ 6″ × 4′ 2″
Slivers, number of	6	6
Size of can	36″ × 17″ × 11″	36″ × 17″ × 11″
Rollers, low front	2″ tooth and pinion	$2\frac{1}{2}$″ tooth and pinion
Rollers, front pressing	$2\frac{1}{4}$″ „ „	3″ „ „
Rollers, low back	3″ „ „	3″ „ „
Rollers, back pressing	$3\frac{1}{2}$″ „ „	$3\frac{1}{2}$″ „ „
Fallers, number up	12	14
Screw pitch	$\frac{3}{8}$″	$\frac{1}{2}$″
Fallers, length over all	$18\frac{1}{4}$″	$18\frac{1}{4}$″
Fallers, pinning	16	12
Draft (about)	5·5	6·5
Ends up	6	6
Knocker-off	29 and 59	29 and 39
Front roller, output per rev.	2″ × $3\frac{1}{7}$ = $6\frac{2}{7}$″, or 0·16 meters	—
Back roller, output per rev.	3″ × $3\frac{1}{7}$ = $9\frac{3}{7}$″ or 0·24 meters	—
Double thread screw $\frac{3}{8}$″ pitch equals	$\frac{3}{4}$″ traverse per rev. or 0·019 meters	—

Front draft, by inches—

$$\frac{2'' \times 22 \times 30}{7 \times 50 \times \frac{3}{4}''} = \frac{176}{35} \text{ or } 5\frac{1}{35}$$

Back draft, by inches—

$$\frac{\frac{3}{4}'' \times 72 \times 88 \times 7}{22 \times 18 \times 22 \times 3''} = \frac{14}{11} \text{ or } 1\frac{3}{11}$$

Total draft, by inches—

$$\frac{2'' \times 22 \times 30}{7 \times 50 \times \frac{3}{4}''} \times \frac{\frac{3}{4}'' \times 72 \times 88 \times 7}{22 \times 18 \times 22 \times 3''} = \frac{176}{35} \times \frac{14}{11} = 6\frac{2}{5}$$

Total draft, by meters—

$$\frac{0{\cdot}16 \times 30}{50 \times 0{\cdot}019} \times \frac{0{\cdot}019 \times 72 \times 88}{22 \times 18 \times 0{\cdot}24} = 6\frac{2}{5}$$

Knocker-off for 11 lbs.—

$$\frac{2'' \times 22 \times 37 \times 41}{7 \times 36} \times 2 = 530 \text{ yds. sliver, } 3\tfrac{1}{3} \text{ oz. for 10 yds.}$$

Knocker-off for 5 kilos—

$$0{\cdot}16 \times 37 \times 41 \times 2 = 485{\cdot}4 \text{ meters of } 97{\cdot}08 \text{ meters per kilog}$$

ELEVATION.

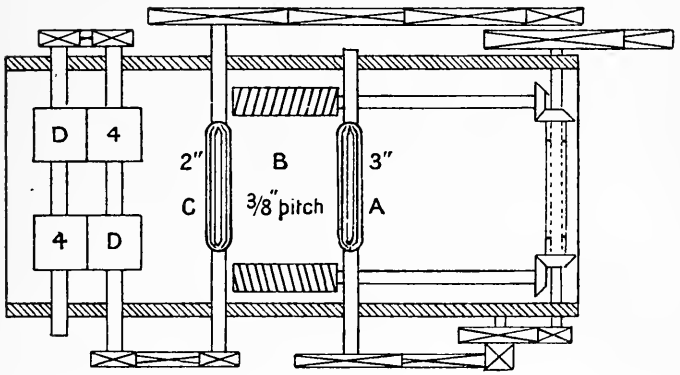

PLAN.

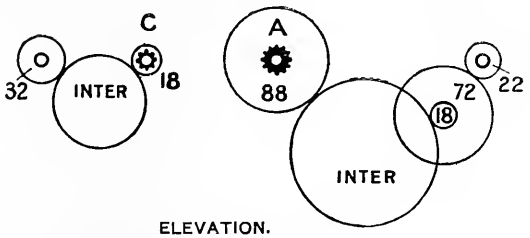

ELEVATION.

Fig. 46.—Can gill box.

screw rotates in a circle four inches in diameter, it follows that it must travel about $300 \times 4 \times 3\frac{1}{7}$ or 3643 in. per minute, or 5 ft. per second, and every faller will therefore be driven down on to the low saddle at this velocity. To enable the fallers to withstand this rough usage, it is necessary to make them of the very best steel, and even then it is not surprising that a very large number are broken. We are so accustomed to many of the effects of gravitation that we are apt to ignore some of its most logical consequences, and in the case of fallers the consequence of the sudden stoppage has to be guarded against, for there is always a natural inclination for the faller to rebound from the solid steel saddle, and the cams must be so constructed that they not only push the faller down, but hold it down long enough to overcome any tendency to rise and jamb against the upper saddle.

In addition to falling on to the low saddle, it is, of course, necessary that the faller should drop accurately into the thread of the lower screw. This is effected by careful adjustments of the screws and by the position of the cams and saddles.

To reduce the number of fallers which are necessary to complete a set, the low screw is always cut at a faster pitch than the upper one; that is to say, that if a faller travels the whole length of the upper screw in 14 revolutions it may traverse the length of the low screw in 7, so that when both screws are rotating at the same speed, as they always must do, there will only be 7 idle fallers in the low screw, whilst there are 14 doing their work in the upper one.

In double thread screws, the relation of the lower and upper screws to one another remains exactly the same, but in each of them there are now two entirely separate threads,

each with its own cams and each traversing the entire length of the screw in exactly half the number of revolutions which would be needed by a single thread for the same distance. To drop 300 fallers a minute it is therefore necessary to run the screws at only 150 revolutions. This naturally halves the speed of the screws and the cams, and it also halves the severity of the shock and the tendency of the faller to rebound from the saddle.

Front Rollers.—Wherever a thin sliver of wool fibre is drafted by two metal rollers, the pressure which has to be applied is so great that the metal rollers would cut, instead of drawing out the fibres, unless a leather were also run between them. The leather acts as a cushion, against which the fibre can be nipped by the roller, without risk of damage. As there is nearly always some grease present, either in the wool or the leather or both, the slight stickiness usually makes the fibre adhere to the leather, sufficiently to make it wrap round the leather in preference to forming a lap on the bare steel roller, and this fact makes accidents from lapping of much less frequence than would otherwise have been the case.

After running in contact with the leather for a few inches, the two narrow parallel slivers are taken from the leather by a second pair of smooth steel rollers, called calender rollers which pay out the slivers direct into the can. These calender rollers run at such a speed that they pay out slightly more than the front rollers, and by means of this very small lead, which can hardly be said to be a draft at all, they put just sufficient strain upon the sliver to keep it tight and to prevent "feather edges," because when the sliver is tight the fibres near the sides have much less inclination to stick to the leather

PARTICULARS OF SPINDLE GILL BOXES.

THIRD PROCESS.

	For 60s botany.	For crossbreds.
Number of boxes	2	2
Length and breadth over all	4′ × 4′ 6″	4′ × 4′ 6″
Spindles, number of	2	2
Spindles, pitch of	$12\frac{3}{8}$″	$12\frac{3}{8}$″
Spindles, speed of	80	80
Bobbins, size of	14″ × 9″	14″ × 9″
Bobbins, size of barrel	3″	$2\frac{1}{2}$″
Rollers, low front	2″ tooth and pinion	$2\frac{1}{2}$″ tooth and pinion
Rollers, front pressing	$2\frac{1}{4}$″ ,, ,,	3″ ,, ,,
Rollers, low back	3″ ,, ,,	3″ ,, ,,
Rollers, back pressing	$3\frac{1}{2}$″ ,, ,,	$3\frac{1}{2}$″ ,, ,,
Screw pitch	$\frac{3}{8}$″	$1\frac{1}{2}$″
Fallers up	12	14
Fallers, length over all	$22\frac{5}{8}$″	$22\frac{5}{8}$″
Fallers, pinning	18	14
Draft (about)	5·5	6·5
Ends up	4	4
Knocker-off	29 and 59	29 and 39
Front roller, output per rev.	2″ × $3\frac{1}{7}$ = $6\frac{2}{7}$″, or 0·16 meters	—
Back roller, output per rev.	3″ × $3\frac{1}{7}$ = $9\frac{3}{7}$″, or 0·24 meters	—
Double thread screw $\frac{3}{8}$″ pitch equals	$\frac{3}{4}$″ traverse per rev. or 0·019 m.	—

Total draft, by inches—

$$\frac{2'' \times 22 \times 30}{7 \times 50 \times \frac{3}{4}''} \times \frac{\frac{3}{4}'' \times 72 \times 88 \times 7}{22 \times 18 \times 22 \times 3''} = 6\frac{2}{5}$$

Total draft, by meters—

$$\frac{0{\cdot}16 \times 30}{50 \times 0{\cdot}019} \times \frac{0{\cdot}019 \times 72 \times 88}{22 \times 18 \times 0{\cdot}24} = 6\frac{2}{5}$$

Turns of twist per inch—

$$\frac{7 \times 50 \times 8 \times 32 \times 6}{2'' \times 22 \times 30 \times 6 \times 60 \times 6} = \frac{56}{297} = \frac{1}{5} \text{ about}$$

Turns of twist per meter—

$$\frac{50 \times 8 \times 32 \times 6}{0{\cdot}16 \times 30 \times 6 \times 60 \times 6} = \frac{8}{1{\cdot}08} = 7{\cdot}4$$

Knocker-off—

$0{\cdot}16 \times 41 \times 43 = 282{\cdot}08$ meters per bobbin of 2 kilos.

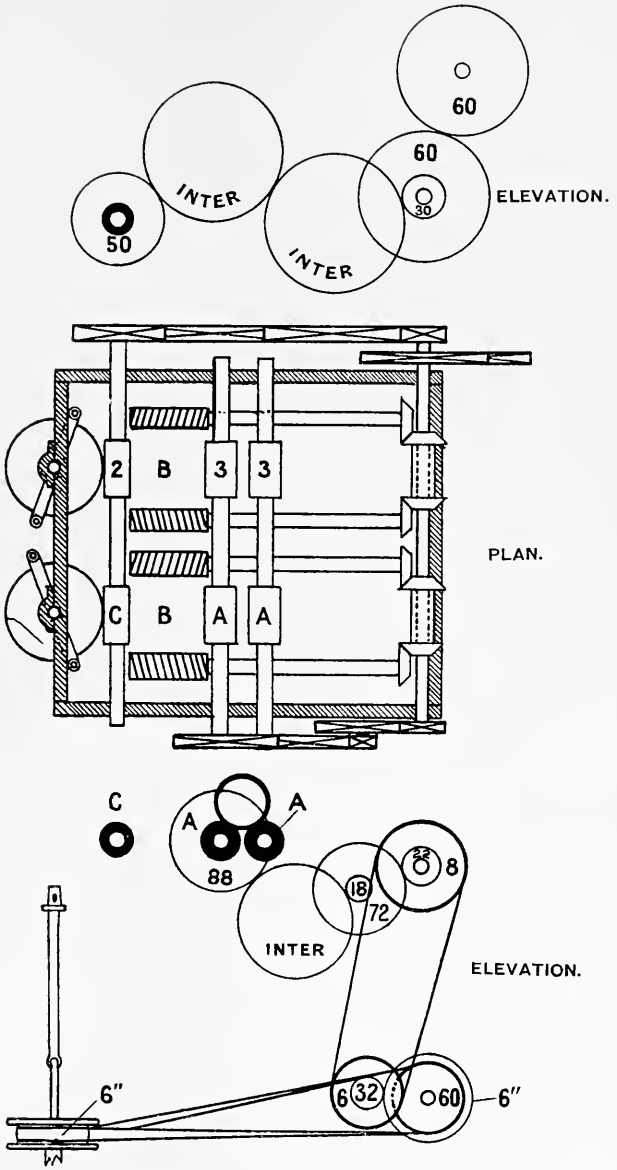

Fig. 47.—Spindle gill box.

and make places where the edges of the sliver are frayed or turned back.

Second Process.—Fine botany material is almost always put through a second **can gill box**, which resembles the first in every respect, but as the slivers going into the box are now contained in cans, from which they run easily without getting twisted, the creel is replaced by light brackets supporting smooth guides, over which the slivers are drawn to the back roller. Each guide should be exactly over the centre of one division of a can, so that the sliver is therefore lifted without rubbing against the sides. This avoids all chance of the sliver being torn by contact with ragged edges on old or damaged cans. In every other respect, excepting in the size of the sliver and possibly the draft and the number of ends up, the first and second boxes are alike; but in crossbred qualities or botany drawings, which are to be used for very thick yarns, the second process is sometimes omitted, and a creel is then put up behind the second box, and both can gill boxes are used for the first process.

Third Process—Spindle Gill Boxes.—The practice of building gill boxes in such a way that they can only produce two slivers is probably due to the excessive strain there would be on fallers long enough to take three or four slivers side by side.

In the first place, practice shows that extra length causes many more fallers to break, as they drop on to the lower saddle; and in the second, the strain of drawing the three slivers would be so great, that it would soon pull a three-eighths faller out of shape. In spite of this drawback it is still usual to have very long fallers in the spindle gill boxes, simply because people prefer to make a small saving in first

cost and to waste time and money in replacing broken fallers, rather than pay for a more expensive box.

The bobbins on most spindle gill boxes measure 10 in. in diameter, and as there must be room between them for the flyers to pass one another, it generally happens that the centres are not less than 13 in. apart. It is found that if the centre of the sliver does not leave the front roller exactly in a line with the centre of the spindle, different parts of the sliver will be at different tensions, and in consequence it can never be absolutely round. This means that if the very best results are to be obtained, the fallers must have two sets of pins whose centres will be 13 in. apart, so that if each set is $4\frac{1}{2}$ in. wide, the outside pins will be $17\frac{1}{2}$ in. apart, the faller nearly 2 ft. long over all. Every one who runs such fallers, even in double-thread screws, knows that the cost in breakages is much heavier than that of shorter fallers, and the spindle gill boxes are run at a slower speed accordingly. A three-spindle box would have to be made with three complete sets of fallers, cams and screws, each faller being pinned over only $4\frac{1}{2}$ in., for one sliver. The first cost per spindle would be relatively heavier than that for two-spindle boxes with long fallers, but three spindles would of course be easier to mind than four, and would take up less room, quite apart from the fact that each spindle would be able to run at nearly double the speed of those in the old-fashioned box. There would be no difficulty with the fallers, for they would only be 10 in. long over all, and besides being greatly reduced in weight, they would be greatly increased in their relative strength.

It may be taken as the universal custom of the trade to begin the use of twist at this process, but like most arbitrary arrangements this is quite illogical. Twisted sliver cannot be

treated satisfactorily in gill boxes, and the suitability of a sliver for gilling must have some relation to its size. In Table I., p. 106, gilling ceases where the sliver has been reduced to 142 m. per kilo, whilst in crossbred qualities which are still more suitable for treatment by gilling, it is discontinued when the sliver is twice that thickness, *i.e.* 78 m. per kgo. In a botany drawing, intended for very thick counts, the same rule would apply, and if it were found by experience that square cans were not suitable for a third process, there can be no possible doubt that sliver of 200 m. now treated in the second drawing box, with twist and without fallers, could be easily run from circular coiler cans, so that it could have the extra advantage of being treated by two extra gilling processes. At all events, in thick sorts, an extra gilling process could be introduced with saving in both cost and wages.

Fluted Rollers.—To understand what is the output of fluted rollers under various conditions it is easiest to consider first, what is the output of a pair of smooth rollers doing similar work. A pair of 2 in. smooth rollers making 100 revolutions per minute would deliver $100 \times 2 \times 3\frac{1}{7}$ or 628 in. per minute, which is their calculation output. If the same pair were run with a leather over the lower roller, it would move just the same distance in the same time, and a sliver drawn by smooth rollers, with or without a leather, would be delivered at exactly the same rate. With fluted rollers the output under these three conditions would be different in every case, and there would also be a difference in output with thick and with very thin slivers.

The output of fluted rollers is often said to be $3\frac{1}{7}$ times the diameter of the mean line **A**, Fig. 48, halfway between the tips and the deepest part of the flutes; but as a matter of fact, the

length of a line drawn from point to point of the flutes all round the roller may be taken as equal to the minimum output. This is very nearly equal to $3\frac{1}{7}$ times the diameter over the flutes, and as the output is always varying, this figure will be used in following calculations, but it must be remembered that gill box rollers often turn out a great deal more than this amount.

If a very thin tape were run through two bare steel-fluted rollers (Fig. 48) under heavy pressure, the output per revolution would nearly equal the total length of the line **B**, representing the outside of the driving roller, or five times the diameter of the mean line **A**. With a thick leather, which could not be pressed so deep into the flutes, the length would come much nearer to $3\frac{1}{7}$ times the total diameter, and the output of sliver from such a pair of rollers, with a leather on them, would naturally be less than the output of the same sliver from the rollers working without a leather.

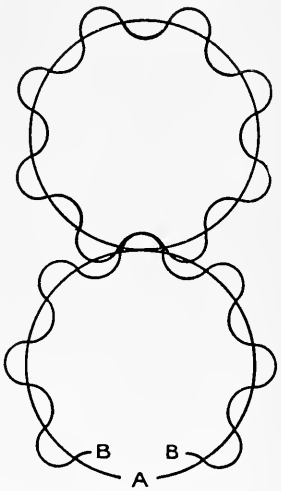

FIG. 48.

The draft calculations in preparing and other gill boxes come very nearly accurate, because the sliver, coming through the back rollers, is many times the thickness of the sliver between the front rollers. The thick sliver keeps the back rollers apart, and effects their output very nearly to the same extent as the leather and sliver together affect the front rollers.

The Knocker-off.—In order to ensure that the sliver as it

comes from the front rollers is of the right weight per yard, it is necessary that it should be accurately measured, so that the length on each bobbin may be known. Each bobbin is weighed when full, and after the nett weight of the empty bobbin is deducted, the weight of wool, divided by the length of sliver, will show the exact weight per yard.

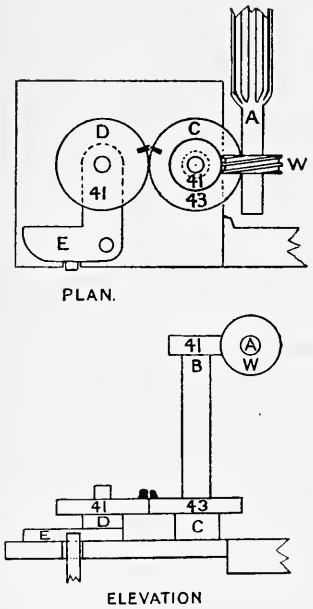

Fig. 49.—Knocker-off.

The piece of apparatus used on any machine for this purpose is known as a knocker-off, because it stops the box when the required length has run on to the bobbin of the spindle gill box. On the spindle gill box, as well as on the can gill boxes, the type of motion used is that known as the "candle-stick" (see Fig. 49).

The wheel **C** has usually an indivisible number of teeth, such as 43, and on it there is one tooth which projects beyond the others. On the wheel **D** there is a similar tooth, and when the two wheels are in gear and the teeth start from a point exactly between the centres of the two wheels, each wheel must move a number of teeth equal to the least common multiple of the number of teeth in both wheels, before the projections meet again. 1763 is the least common multiple of 41 and 43, and hence it happens that the wheel **C** will revolve just as many times as there are teeth in **D** before the projecting teeth meet again.

Every time the two teeth meet, they move the lever **E** and stop the box, and the output of the front rollers during one "doffing" is therefore found by multiplying the circumference of the roller **A** by the teeth in the wormwheel **B**, multiplied by the teeth in **D**, or $0{\cdot}167 \times 41 \times 43 = 282{\cdot}08$ meters per bobbin of 2 kilos. Under a decimal system each bobbin from a spindle gill box might be made to hold 5 kilos, so that the two would contain 1410 m.

When bobbins are to be weighed, it is of course necessary that they should be all exactly alike, "balanced," as it is termed, to a round figure which is easy to deduct from the total weight when full, so that the net amount of material on the bobbin can be readily computed, and the draft of the box altered a tooth or two, according as there may be too much or too little material on the last lot of bobbins.

No matter how carefully a box may be adjusted, or how accurate the rollers may be in size, it will be found that all the bobbins of one doffing do not contain exactly the same length; and when they are running out in a creel, portions of the longest bobbins must be pieced to the shorter ones, so that all the ends may run out together. If it has been necessary to alter the draft in the course of the day, it will also happen that some of the bobbins weigh just too light and some may be slightly too heavy, whilst others are exactly right. In filling the creel of the next box, care is therefore necessary to see that the different weights are evenly distributed to every spindle. Let us suppose an alteration were made at the finishing box. In the slubbing, where there are three ends up to each spindle, it would be necessary to group the bobbins in the creel in such a way, that one heavy bobbin, one light one, and one of correct weight would run up to each

spindle, so that all the resulting slubbing bobbins would be exactly alike.

Fourth Process—First Drawing Box.—This is the first process in which the sliver contains twist as it enters the back rollers, and there are two visible alterations in the machinery for the necessarily altered treatment.

The presence of twist binds the fibres so closely to one another, that the pins of the fallers could not move freely through them without breaking many fibres, and consequently fallers are not used. Their absence makes it necessary to have a very much shorter ratch, and the back and front rollers are only set a fraction of an inch further apart than the length of the longest fibre. To prevent slipping of the short fibres in the absence of faller pins, carriers are here introduced for the first time. The lower carrier roller revolves at about $1\frac{1}{2}$ times the surface speed of the back roller, and it carries an upper roller of wood, which has sufficient dead-weight in itself to prevent the short fibres being carried forward by friction to the front roller, but not sufficient weight to prevent long fibres being drawn under it, as soon as they are caught in the nip. The second pair of carriers revolve slightly slower than the first, with only a very slight lead on the back rollers. In the back rollers themselves there is the greatest alteration. The pull necessary to withstand the draft in the twisted sliver is so great, that a single pair of smooth rollers could not possibly hold the wool, and consequently there are four rollers, all of equal size, arranged one above the other in such a way that there are three nips, through all of which the wool goes. This arrangement might be used with equal advantage for spindle gill boxes where smooth back rollers are deemed an advantage. All the rollers

carry wheels which have an equal number of long teeth, so arranged that when the rollers are resting on one another, or even when they are separated by wool, the wheels are still in gear and every roller of the group is bound to rotate with the same surface velocity. This arrangement gives such a firm grip that it is absolutely impossible for any fibres to slip through the rollers.

Front rollers differ much less in the manner of their arrangement than back rollers. In every process they consist of a single pair, and with the one exception of gill boxes, the lower roller is always of smooth metal, scratch-fluted, whilst the upper one may be of wood, paper, cork, or metal, covered with some medium such as leather, cork, cloth and leather, or cloth and parchment, to give elasticity and make it possible to apply heavy pressure without cutting the fibres. Both rollers might be elastic if desired, but elastic materials naturally wear much faster than iron or steel, and it is necessary to have the size of the low (driving) roller constant, so that the output is always the same under all conditions.

The size of the pressing roller is a matter of no moment, because it is pressed so tightly against the low roller that the one cannot possibly slip on the other. The surface traverse of both must be identical, and therefore when the surface of the upper roller is worn, it can be turned down without in any way affecting the output.

Pressing Rollers.—Very early in the history of roller draft, pressing rollers were made of wood covered with leather, and so well have they done their work that many of the rollers in use to-day are of this type. Whenever wood is used for machinery it is unfortunately liable to warp and split, and in spite of the extreme care taken in the preparation of the wood

used for roller bosses, they seldom remain absolutely true for any great length of time. The smaller ones, which were always made from a single piece of wood, were very liable to split in working, but larger rollers were made of segments of wood screwed and glued together on to an iron centre. When turned up and covered with one or two thickness of stout sole-leather, turned up and polished, they make a roller most elastic, and in many ways very suitable for its purpose, but badly wanting in permanence, so that for many years, it has been the ambition of makers to substitute iron for wood.

Where both upper and lower rollers are of iron, it follows that the leather covering of the former is continually being rolled between two metal surfaces, under heavy pressure, and as this treatment always tends to extend the leather, it was found very difficult to keep a leather fast to the upper roller by means of any kind of glue or cement, and of course the necessity for absolute uniformity of face precludes the use of nails or stitching. The greater adhesive power of glue with wood, made wooden rollers much easier to cover, so that until recently, wood has been the favourite material for roller bosses (see Appendix C).

Of recent years the art of stretching leather, together with an improvement in the kind of cement or glue used, has lengthened the life of leather on iron rollers so much, that they do not require covering oftener than wood, and they remain true under much more adverse circumstances; for these reasons they are rapidly coming into general use.

Leather covering is far from permanent on rollers, however well they may be covered, but as yet nothing has been found to supersede it, although many efforts have been made to do so. The substitute which most nearly succeeded was a

composition of cork, compressed into bosses which needed no leather covering, when they were mounted on iron axles and turned up smooth in a lathe. They were used largely for some years by many firms, but the final verdict went against them, and most people gave them up under the idea that their extra initial cost and their short life did not compensate for any reduction which they made in the leather bill.

Almost all drawing rollers are now made of iron, covered either "soft" or "hard" with leather, and though they vary in size in the different processes, they resemble one another so nearly that a description of one type will equally well describe them all. Clearly the larger the roller circumference, the fewer times will it rotate per minute, and the longer will the covering last in consequence; but excessively large rollers cannot be used, because they would prevent the upper carrier coming anywhere near the nip, and 10 in. diameter may be taken as the maximum. Even this size would drive the carrier too far from the nip, if the roller stays were not inclined forward. For botany qualities and fine crossbreds, rollers are always "double covered hard"—that is to say, every roller made of wood or iron has two layers of leather stretched and glued tightly on to it. For longer crossbreds and English and mohair wools, soft covering is preferred, but it is very difficult to say exactly which of the intermediate sorts do best with hard, and which with soft covered rollers, because some firms use one type and some another for $^{2}/40^{s}$ crossbred.

All soft rollers, whether made of iron or wood, are first covered with a layer of thick felted cloth and then with thick flexible leather, which is either sewn with strong cord or nailed tightly to the sides of the roller as the case may be. As it is impossible to turn soft rollers up, after they have been

PARTICULARS OF FIRST DRAWING BOX.

Fourth Process.

	For fine botany, 60s and above.	For crossbreds.
Number of boxes	1	1
Length and breadth over all	6′ 6″ × 10′	6′ 6″ × 10′
Number of spindles	4	4
Pitch of spindles	$12\frac{3}{8}$″	$12\frac{3}{8}$″
Size of bobbin	14″ × 9″	14″ × 9″
Size of bobbin barrel	3″	$2\frac{1}{2}$″
Low front rollers	4″ scratch fluted	4″ scratch fluted
Front pressing rollers	$7\frac{1}{2}$″ covered double hard	$8\frac{1}{4}$″ cloth and leather laced
Back rollers	$2\frac{1}{2}$″. Four in set	$2\frac{1}{2}$″. Four in set
Low carriers	1″	1″
Tumblers	1″ and $1\frac{1}{8}$″ wood	1″ and $1\frac{1}{8}$″ wood
Draft (about)	5·5	6·5
Ends up	4	5
Speed of back shaft	200	200
Type of lifter motion	Mangle	Mangle
Type of knocker-off	3 wheels	3 wheels
Speed of spindles	160	160
Front rollers, output per rev.	4″ × $3\frac{1}{7}$ = $12\frac{4}{7}$″, or 0·32 meters	—
Back rollers, output per rev.	$2\frac{1}{2}$″ × $3\frac{1}{7}$ = $7\frac{6}{7}$″, or 0·20 meters	—
Back shaft, revs. per min.	160	—

Draft, by inches—

$$\frac{4'' \times 22 \times 100 \times 84 \times 7}{7 \times 44 \times 63 \times 22 \times 2\frac{1}{2}} = 4\frac{28}{33}$$

Draft, by meters—

$$\frac{0{\cdot}32 \times 100 \times 84}{44 \times 63 \times 0{\cdot}20} = 4\frac{28}{33}$$

Turns of twist per inch—

$$\frac{7 \times 154 \times 9 \times 6}{4'' \times 22 \times 46 \times 11 \times 6} = \frac{441}{2024} = \frac{11}{51} \text{ turns per inch}$$

Turns of twist per meter—

$$\frac{154 \times 9 \times 6}{0{\cdot}32 \times 46 \times 11 \times 6} = \frac{63}{7{\cdot}36} = 8\frac{1}{2} \text{ turns per meter}$$

Lifter, strokes per minute—

$$160 \times \frac{35 \times 26 \times 5}{100 \times 155 \times 32 \times 2} = \frac{91}{124} = \frac{3}{4} \text{ per minute}$$

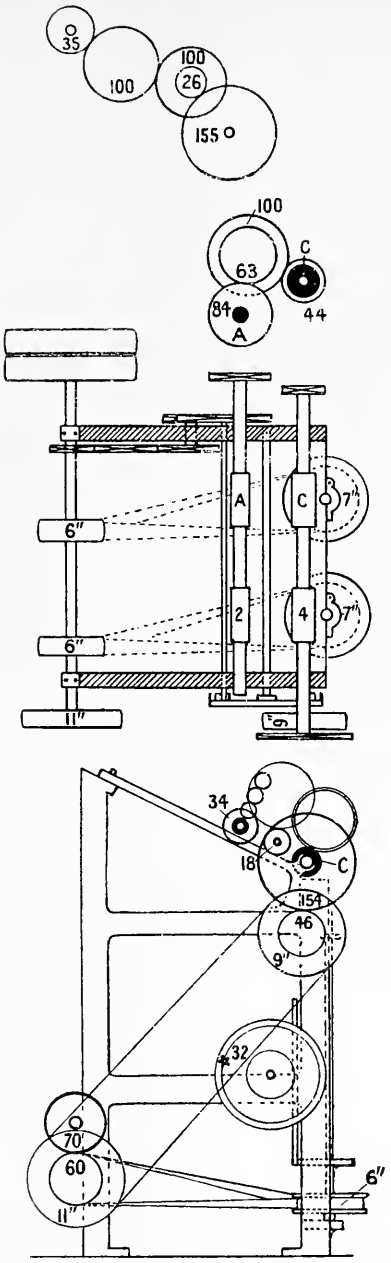

FIG. 50.—First drawing box.

covered, they naturally do not run quite as true as hard covered rollers when they are on the frame, and they look most unlikely to do good work to any person who is only accustomed to the use of hard rollers. Many people will have nothing to do with them for long crossbred qualities, but the fact remains that there are sorts for which they must be used (Appendix C).

The draft depends entirely on the relation of the output of the back rollers to the output of the front rollers, and as both pairs are now smooth, instead of being fluted like the gill box rollers, the actual and calculation figures may be made to fit with considerable accuracy. It will also be noticed that there are very few wheels in the train that connects these two sets of rollers, and the calculation is therefore very much simpler than that necessary for gill box drafts. Furthermore, the draft always bears some definite proportion to the draft wheel, so that any alteration is only a matter of simple proportion.

Where the same figures are in constant use it is, of course, unnecessary to work through the whole draft calculation each time a change is made, and when an average draft has once been worked out, it is common to notice its relation to the draft wheel, and to say, for instance, that a 44 wheel equals a draft of 6; taking these figures as a basis for all future calculations, and making such calculations a matter of simple proportion. This system of reckoning is particularly applicable to the method in common use, which is always based on the actual, rather than on the calculated size of sliver. If the sliver is found to be too heavy or too light, on weighing a bobbin, it is reduced or increased as desired. For instance, a bobbin which should weigh 5 lb. net, only weighs 4 lb. 14 oz.

with a 46 draft wheel; a simple proportion sum will give the requisite size of draft wheel, and may be stated thus:—

As 4 lb. 14 oz. : 44 :: 5 lb. : 43.

Drag.—The principle of drag as it affects all fly spindles has been treated so fully, that no further theorizing is necessary here, but there are one or two practical difficulties which may be pointed out with advantage. The ideal condition is one in which the drag could be made uniform throughout the whole process of filling the bobbin, no matter what the weight might be when empty and when full. As yet this is quite impossible in open drawing, and it is only accomplished in cone drawing, by means of a very complicated mechanism. The user of open drawing must be content to make his drag as uniform as possible, and avoid having the strain on the fibres greater than is necessary. It is essential for this purpose that the under surface of the bobbins and the surface on which the washers rest should be smooth and uniform, so that the washers have uniform friction on every portion of their surface. Leather, felt, and thick woollen cloth are all used for washers, and no rules can be laid down as to their relative utility, because they all alter greatly in the amount of their grip, by absorbing a certain amount of oil, and therefore they never cause exactly the same amount of friction at any two periods of their existence.

If the washer had no hole in its centre, its area would naturally vary in exact relation to the square of its diameter, but its annular nature makes the proportion greater. For instance, a 2-in. washer with a 1-in. hole contains only 2·3 sq. in. instead of 3·14, and it is only one-fifth instead of one-fourth the area of a 4-in. washer. In addition to this exaggerated proportion, the larger sized washers exert their increased drag

at a greater distance from the centre of the bobbin, and hence the amount by which they retard rotation is increased still more than appears at first sight. To calculate the drag would be such a difficult matter, that it is never attempted, and in practice the amount of strain on the sliver is always judged by feel.

In following the course of the material through the remainder of this drawing, we shall consider that in all particulars the boxes resemble those described in Table I., p. 106, and for the sake of simplicity the wheels which effect the draft are arranged to give a draft of 6 with a 44 wheel on a $2\frac{1}{2}$-in. front roller, and with a $1\frac{1}{2}$-in. back roller.

$$\text{Thus } \frac{2\frac{1}{2} \times 100 \times 100}{63 \times 44 \times 1\frac{1}{2}} = 6\frac{1}{8\,0\,0}$$

and when there are 4-in. front rollers and 2-in. back we might take $\frac{4 \times 84 \times 100}{44 \times 63 \times 2}$, which gives a figure with a larger fraction, *i.e.* $6\frac{2}{3\,3}$.

Thus with five ends up in the first drawing box we get 170 m. sliver, and if each of the 14 × 9 bobbins holds 5 k.g. the front rollers must revolve 5 × 0·8 × 170, or 580 times before the bobbin has received the desired quantity.

With the exception of the size of the bobbins and the number of ends up behind the back rollers, the two **second drawing boxes**, the **finishers**, and the **slubbing** are so much alike that reference will not be made to each in detail, as full particulars are given in the tables on pages 139 and 140.

In this and the following boxes the knocking-off motion is usually of a different type to that used in the gills. It is a simple arrangement of worms and wheels so placed that on each revolution of the final wheel, a peg in its circumference

PARTICULARS OF SECOND DRAWING BOX.

Fifth Process.

	For 60s botany.	This operation may be omitted for some crossbreds.
Number of boxes	1	1
Length and breadth over all	8′ 10″	8′ 10″
Number of spindles	6	6
Pitch of spindles	11¼″	11¼″
Size of bobbin	14′ × 8″	14′ × 8″
Size of bobbin barrel	2½″	2½″
Low front rollers	4″	4″
Front pressing rollers. Iron	7½″. Covered double hard	8¼″. Cloth and leather laced
Back rollers	2½″	2½″
Low carriers	1″	1″
Tumblers	1″ and 1⅛″. Wood	1″ and 1⅛″
Draft (about)	5·5	6·5
Ends up	4	5
Speed of back shaft	200	200
Speed of spindles	180	180
Type of lifter motion	Mangle	Mangle
Type of knocker-off	3 wheels	3 wheels

PARTICULARS OF THIRD DRAWING BOX.

Sixth Process.

	For 60s botany.	For crossbreds.
Number of boxes	1	1
Length and breadth over all	9′ 2″ × 10′	9′ 2″ × 10′
Spindles, number of	8	8
Spindles, pitch of	10¼″	10¼″
Spindles, speed of	200	200
Bobbin, size of	14″ × 7″	13″ × 7″
Bobbin, size of barrel	2¼″	2¼″
Rollers, low front	4″	4″
Rollers, front pressing. Iron	7½″. Covered double hard	8¼″. Cloth and leather laced
Rollers, back	2½″	2½″
Carriers, low	1″	1″
Carriers, upper. Tumblers	1″ and 1⅛″. Wood	1″ and 1⅛″. Wood
Draft (about)	5·5	6·5
Ends up	3	3
Speed of back shaft	200	200
Lifter motion	Mangle	Mangle
Knocker-off	3 wheels	3 wheels

For all calculations for these processes, see fourth process or first drawing box.

PARTICULARS OF FINISHING BOXES.

SEVENTH PROCESS.

	For 60s botany.	For crossbreds.
Number of boxes	2	2
Length and breadth over all	8′ 6″ × 10′	11′ 6″ × 10′
Spindles, number of	8	8
Spindles, pitch of	$9\frac{1}{4}$″	$9\frac{1}{4}$″
Spindles, speed of	230	230
Bobbin, size of	11″ × 6″	11″ or 12″ × 6″
Bobbin, size of barrel	2″	2″
Rollers, low front	4″	4″
Rollers, front pressing. Iron	$7\frac{1}{2}$″. Covered double hard	$8\frac{1}{4}$″. Cloth and leather laced
Rollers, back	$2\frac{1}{2}$″	$2\frac{1}{2}$″
Carriers, low	1″	1″
Carriers, upper. Tumblers	1″ and $1\frac{1}{8}$″. Wood	1″ and $1\frac{1}{8}$″. Wood
Draft (about)	5·5	6·5
Ends up	3	3
Speed of back shaft	200	200
Lifter motion	Mangle	Mangle
Knocker-off	3 wheels	3 wheels

PARTICULARS OF SLUBBING BOXES.

EIGHTH PROCESS.

	For 60s botany.	Not required for crossbreds.
Number of boxes	2	
Length and breadth over all	16′ 9″ × 8′	
Spindles, number of	24	
Spindles, pitch of	$7\frac{1}{4}$″	
Spindles, speed of	380	
Bobbin, size of	9″ × 5″	
Bobbin, size of barrel	$1\frac{3}{4}$″	
Rollers, low front	4″	
Rollers, front pressing. Iron	$5\frac{1}{4}$″. Covered double hard	
Rollers, back	2″	
Carriers, low	1″	
Carriers, upper. Tumblers	$\frac{7}{8}$″ and 1″. Wood	
Draft (about)	6	
Ends up	2	
Speed of back shaft	125	
Lifter motion	Mangle	
Knocker-off	None	

For all calculations for these processes, see fourth process or first drawing box, making the necessary alterations in sizes of wheels.

PARTICULARS OF REDUCING BOXES.

Ninth Process.

	For 60s botany.	Not required for crossbreds.
Number of boxes	3	
Length and breadth over all	18′ 4″ × 3′ 6″	
Spindles, number of	32	
Spindles, speed of	950	
Spindles, pitch of	6″	
Bobbin, size of	7″ × 4″	
Bobbin, size of barrel	$1\frac{1}{2}$″	
Rollers, low front	4″	
Rollers, front pressing. Iron	$5\frac{1}{4}$″. Covered double hard	
Rollers, back	2″	
Carriers, low	$\frac{7}{8}$″	
Carriers upper. Tumblers	$\frac{3}{4}$″ and $\frac{7}{8}$″. Wood	
Draft (about)	6	
Ends up	2	
Speed of back shaft	237	
Lifter motion	Mangle	
Knocker-off	None	

For all calculations for reducing boxes, see the tenth process, making any necessary alterations in the sizes of wheels.

The whole of the particulars in these ten tables are given by Messrs. Prince Smith & Son as representing the most recent practice in the trade. The sizes of rollers in larger boxes hardly ever vary from the figures here given, but under certain circumstances smaller sizes may be adopted for the front rollers of later processes. For example—

For short botany, such as good Cape, the rollers in reducing and roving may be reduced to 3 in. in diameter.

For botany tops which are little longer than clothing wool, the reducing rollers may be 3 in. and the roving $2\frac{1}{2}$ in. in diameter.

PARTICULARS OF ROVING BOXES.

TENTH PROCESS.

	For 60s botany.	For crossbreds.
Number of boxes	9	—
Length and breadth over all	14′ 6″ or 15′ 10″ × 3′ 6″	18′ 4″ × 3′ 6″
Spindles, number of	32	32
Spindles, pitch of	$4\frac{1}{2}$″ or 5″	6″
Spindles, speed of	1200	1000
Bobbin, size of	5″ or 6″ × 3″	6″ or 7″ × 4″
Bobbin, size of barrel	$1\frac{3}{16}$″	$1\frac{7}{16}$″
Rollers, low front	4″	4″
Rollers, front pressing. Iron	$5\frac{1}{4}$″. Covered double hard	6″. Cloth and leather laced
Rollers, back	2″	2″
Carriers, low	$\frac{7}{8}$″	$\frac{7}{8}$″
Carriers, upper. Tumblers	$\frac{7}{8}$″ or $\frac{7}{8}$″	$\frac{7}{8}$″ or $\frac{7}{8}$″
Draft (about)	6	6·5
Ends up	2	2
Speed of back shaft	300	250
Lifter motion	Mangle	Mangle
Knocker-off	None	None
Output of front roller per rev.	0·32 meters or 4″ × $3\frac{1}{7}$″	—
Output of back roller per rev.	0·16 meters or 2″ × $3\frac{1}{7}$″	—

Draft by inches—

$$\frac{4'' \times 22 \times 100 \times 100 \times 7}{7 \times 44 \times 63 \times 22 \times 2''} = \frac{5000}{693} = 7\frac{1}{5}$$

Draft by meters—

$$\frac{0{\cdot}32 \times 100 \times 100}{44 \times 63 \times 0{\cdot}16} = \frac{5000}{693} = 7\frac{1}{5}$$

Twist in inches—

$$\frac{7 \times 135 \times 125 \times 8}{4'' \times 22 \times 48 \times 70 \times 2} = \frac{1125}{704} = 1\frac{4}{7} \text{ per inch}$$

Twist per meter—

$$\frac{135 \times 125 \times 8}{0{\cdot}32 \times 48 \times 70 \times 2} = \frac{1125}{17{\cdot}92} = 63 \text{ per metre}$$

Lifter with back shaft 300—

$$\frac{300 \times 2 \times 31 \times 22 \times 5}{8 \times 40 \times 155 \times 33 \times 2} = \frac{5}{8} \text{ picks up and down per minute}$$

Speed of spindles—

$$300 \times \frac{8}{2} = 1200 \text{ revolutions per minute}$$

In theory, smaller rollers would be better in all the boxes of a drawing made expressly for short wool, because when the nips of the back rollers, carriers, and front rollers can be set nearer together, they have more control over tops containing a large percentage of short fibres; but as they need more pressure to obtain the same amount of grip as larger rollers (see p. 174), they have been known to heat if overloaded. Their output is, therefore, apt to be less, and they can only be used economically in special circumstances.

For all calculations, the writer alone is responsible, and in nearly all of them, sizes of wheels have been used, which reduce the calculations to the simplest possible form. In practice, other sizes would be used, which make the fractions far more intricate.

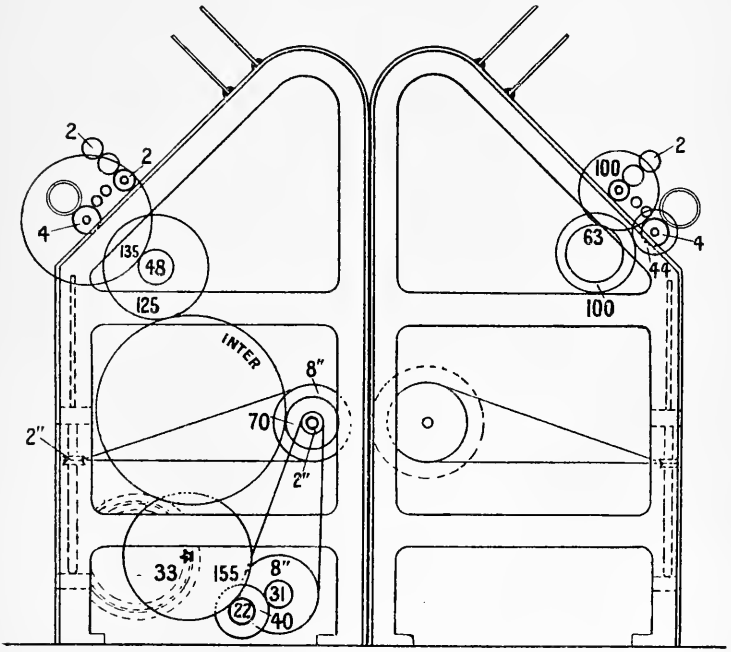

FIG. 51.—Roving box.

pushes a catch from a spring, and by so doing throws the belt-fork over the loose pulley and stops the box.

Piecings.—The taking out of piecings needs too much manual dexterity to be possible of lucid description here, or in any book. The process must be learned at the machine, but it is well for every student to remember, that in all boxes where there are no fallers, it is a practical impossibility to make a piecing behind a box, which will not show after drafting; and consequently the plan usually adopted is to make a piecing of such a nature that it is clearly visible after it has come through the front rollers. The box must be stopped after each piecing has gone through the rollers, so that the lump which it causes in the sliver can be taken out. If this precaution is not taken, very serious defects are certain to occur in the yarn. Matters of this kind are really quite outside the range of the theorist; they are practice pure and simple, and they are only mentioned here, because however perfectly a drawing may be set and equipped, a manager would have no chance of getting uniform work, unless these points were well arranged and carefully carried out.

Reducing and roving boxes differ so much in appearance from the drawing boxes which precede them that it is worth while to consider in what the essential differences consist.

1. Each box contains many more spindles, because the weight of sliver delivered by each roller is so small, being less than one-fortieth the size of the sliver at the first gill box.

2. The spindles run a great deal faster than those of the earlier boxes. This is necessary because the reduced sliver requires many more turns to make it proportionately as strong as the thick sliver from the spindle gill box. The word strong is not used here as signifying the amount of weight

it would lift, but simply to denote its suitability for drafting. It means that if a yard of roving be held firmly in the fingers and its ends then drawn apart, the fibres should not be bound so tightly to one another that they snap or "pluck" under the tension, but should contain just so much twist that under considerable strain, applied very slowly, the fibres will move on one another. When sliver will act in this way under tension, it will draft easily and uniformly between the rollers, and this ought to be the condition of twist present in every box of the drawing. The comparison of the twist necessary to give this result to each of the different sizes of sliver ought to be carefully considered by every user. Sufficient data are not procurable to formulate any schemes of twist with safety; indeed, it is most unlikely that any scheme would ever be of use, for it is almost certain that the twist would have to be altered, whenever the diameter of the fibre (in other words, the quality) bore a different relation to the average length of the fibres in the top.

3. The size of the bobbins is much less than that of preceding processes. The speed of the box is determined here, as in other places, by the speed at which the spindles can be run, and it is found that 1000 revolutions per minute is about the limit for a flyer 6 × 4, which is not stayed at the top, and 1200 for a flyer of the same type $5\frac{1}{2} \times 3\frac{1}{2}$ suitable for a 5 × 3 roving bobbin. It is a curious coincidence, or else a case of artificial selection, that the size of bobbin suited to the respective sizes of sliver in the different boxes is such, that their flyers when running at the highest possible speed are putting in just so much twist, that the front rollers in all the different processes happen to turn out almost exactly the same length of sliver, quite irrespective of its size.

In all fly spindles the size of the bobbin invariably has some effect on the drag, and as the roving is only capable of bearing a strain in proportion to its size, the bobbins have to be reduced at every process through the drawing; many roving bobbins being only 5 × 3 in. In cone drawing this is not the case. There, the size of the bobbin can be increased without increasing the strain in filling it, but when the roving comes to be unwound on the spinning frame, there is another strain put upon the yarn which varies with the weight of the bobbin, and when fine counts are to be spun from rovings on very large bobbins, this extra strain affords extra opportunity for uneven work, unless some special means is taken to obviate it.

Spindle Drive.—The belts which are used to drive the spindles in all the drawing boxes are so much more powerful than necessary, that there is very little fear of the twist in the sliver ever being less than calculated, but in the reducing and roving boxes there are so many fast running spindles that it would involve great waste of power to run so many comparatively heavy belts, and the spindles are therefore driven by bands of twisted cotton, which are stretched tightly over a grooved pulley on the back shaft and over the whorle. Because the whorle does not rise and fall, as in a spinning frame, but always remains at a constant distance from the back shaft, this system is fairly efficient. Tension pulleys on the same principle as those used for spinning frames have been tried with a view to saving power, but as the strain on the band never varies very much, they are not generally thought to be necessary. The half-round section of the whorle groove, which is the type in most general use, is not calculated to secure the greatest amount of grip on the band, and several

arrangements have been attempted to increase the friction without undue complication of parts, but a deep narrow V-shaped nick, which would grip the cord, is never used on the spindle.

Doffing.—There is another point of practical importance which may seriously affect output, and which becomes more important in each succeeding process as the bobbins become smaller and fill more rapidly. This is the method by which the full bobbins are removed from the spindles and the empty ones replaced. The more rapidly this can be done, the more work will the box turn out in a week. No bobbin can be removed from a flyer spindle until the flyer has first been removed. In small spindles, such as reducing, roving, and spinning, the flyer is detached from the spindle and the bobbin lifted over the spindle top; but in the drawing, finishing, and slubbing boxes, which resemble one another, the flyer is fixed permanently to the spindle, and both have to be removed before the bobbin can be taken away. The spindle head is carried in a bearing to steady it, and the spindle itself goes through a hole in the lifter-rail so far that its square end fits into a square hole in the footstep, which itself stands on a short spindle and is driven by a belt from the main shaft.

From the position of the rollers it is always impossible to lift a spindle straight up out of the footstep, and they are generally so arranged that they must be disengaged from the bearing at the top, then leaned forward and finally lifted right out of the footstep, the lifter-plate, and the bobbin.

In order that the spindles may be run at the highest possible speed without vibration, it is essential that they should be absolutely fast in both top and bottom bearings, and

to ensure that this is so, several ingenious arrangements have been devised which make it very easy to free the head of the spindle prior to doffing, and to lock it quickly and tightly in its place when the operation is complete.

The method of doffing roving and reducing boxes is worthy of attention, because they differ from the drawing boxes in having the flyer separate from the spindle, and so arranged that it must be lifted off before the bobbin is removed. The position of the spindle in regard to the front roller makes it impossible to take off the flyer and the bobbin, until the spindle has been brought forward, and as it is desirable to do this without taking the bands off the whorles, and without stretching them unduly, the spindle rail is hinged at both ends, at a point exactly in a line with the whorles, so that all the upper end of the spindles may be tilted forward without increasing or diminishing the distance from the whorle to the driving shaft. As soon as the spindles are tilted the flyers and bobbins can easily be removed, and when empty bobbins have been replaced, the spindle can be made vertical by a few turns of the screw which moves the spindle rail.

Drawing Lifter Motions.—In a later chapter on spinning frames the necessity for having a traverse which moves with equal velocity at all points on the up and down strokes is explained at length, with special regard to hearts and cams. For reasons there given, it would be quite impossible to use a crank, and it would be most inconvenient to obtain a 14-in. traverse from any type of heart. A motion is therefore adopted which is known as a "mangle wheel."

In the larger boxes the lifter plate is attached to a rack

moved up and down by a toothed wheel on a shaft which rotates first in one direction and then in the other.

In the smaller boxes a drum of small diameter is fixed to a shaft which has a similar motion, which alternately pays out and winds up a chain attached to the lifter rail. Both of them depend on the mangle wheel for the regularity and rapid reversal of their motion.

Mangle wheels are not limited to any special number of teeth, and are peculiar in having their teeth in the form of pegs on one side, instead of on the edge of the rim (see Fig. 52). In addition each wheel has two solid rings parallel with the teeth running round the wheel, but leaving a channel in which the end of a shaft works. This shaft carries a very small wheel **W**, with four or five teeth gearing into the pegs. The shaft cannot move vertically, but is so arranged that it can move nearly an inch to one side or another, so that when the end of the groove approaches, the wheel automatically turns over the last peg (in considerably less than a revolution) until it is on the opposite side, thereby reversing the movement of the shaft and also of the lifter.

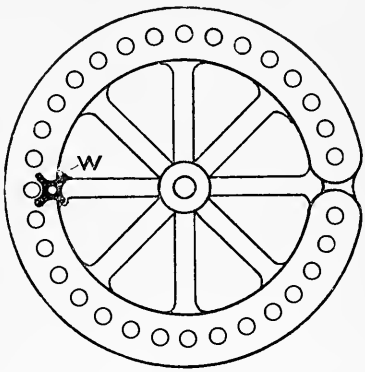

Fig. 52.—Mangle wheel.

CHAPTER VI

CONE DRAWING

Cone Drawing.—In theory, cone drawing differs from open or ordinary worsted drawing, solely in the methods of winding the sliver or roving on to the bobbin. In practice—

1st. There is no difference between the methods of drafting in the two systems, though the construction of some large cone boxes makes it necessary to use a greater number of wheels in order to obtain the draft calculations.

2nd. The twist, or relation of roller speed to spindle speed, is the same in principle, but the necessity of having a positive relation between the spindles and the bobbins, in cone drawing makes it necessary to drive the spindles positively, and involves the use of bevel wheels instead of bands to drive them. This brings many more wheels into use, and makes the twist calculations more complicated than with band-driven spindles.

3rd. In both open and cone drawing the relation of the speed of the bobbin is always altering in relation to the constant speed of the spindles. This alteration is not uniform at different parts of the doffing, but is relative to the number of layers which have been wound on to the bobbin, or, in other words, to the diameter of the wool on the barrel.

4th. The essential difference between the two systems lies

in the fact, that in open drawing, the yarn, after going through the eye of the flyer, must pull the bobbin round, and must therefore be always under tension, which may be very slight and very nearly uniform, if all necessary adjustments are carefully made.

In cone drawing, the bobbin is positively driven throughout the entire process of filling, at speeds varying in relation to the diameter of the wool upon the bobbin, so that the sliver may run all the time without any drag whatever. But it must be borne in mind that if there is the slightest error in the intricate calculations necessary to ascertain the required speed of the bobbin, at every part of the doffing, there may not only be drag, but there must be an actual drafting, or breaking of the sliver between the roller and the flyer.

The crowning difficulty lies in the fact that the acceleration which the bobbin must receive from one layer to the next, differs at different times during the filling. If it is assumed that every lap is $\frac{1}{16}$ in. thick, each layer will add $\frac{2}{16}$, which is one-eighth part of the diameter of a 1-in. barrel; whereas the same $\frac{2}{16}$ is only one-twenty-fourth part of the diameter of the same bobbin when it has been filled up to a size of 3 in., and therefore the acceleration must vary between these two extremes.

This is a superficial summary of the differences between theory and practice. The practical points which need attention must be grouped under more numerous headings.

1st. The figures for the drafting calculations of cone boxes are so simple, and so similar to the figures for open drawing that they need no further explanation (see Appendixes A and B).

2nd. The twist calculations are little more complicated, and only differ from those of the open drawing, in having the

spindle connected by a series of toothed wheels, and not by bands or tapes with the chain of gearing from the front roller (see Appendixes A and B). These calculations must be thoroughly understood, because—

3rd. The speed of the bobbin is controlled by two distinct motions. There is one chain of wheels, which alone would give to the bobbin exactly the same constant speed as that of the spindle, all the wheels in the two series being equal in size.

4th. To this speed, another variable speed is added in the differential motion, and this is regulated by the cones and the gearing which is attached to them.

5th. The speed of the upper cone is constant and positive, but the speed of the lower one is altered at each rise and fall of the lifter, to compensate for the increasing diameter of the bobbin. The shape of the cones is such that the alteration in the acceleration in the lower cone ought to coincide exactly with the increase in the diameter of the bobbin at each lap.

6th. The belt is moved along the cones, say 1 in. for every lap that is added to the bobbin, and the cones are made in such a way that this uniform traverse of the belt fork makes a uniform reduction in the speed of the lower cone at all the different portions of the traverse.

7th. The traverse of the belt fork is regulated by the gear which is known as the "box of tricks." This complicated mechanism is arranged to move the belt fork with the belt, a uniform distance along the cones, every time that the traverse motion has added one complete lap to the bobbin; that is, the fork is moved as the lifter reaches the top, and is also moved to the same extent, or less or more, according to circumstances, just as it reaches the bottom.

8th. Added to these complexities there is still one more. In each successive layer on the bobbin, there is naturally greater length than in the one preceding, and as every wrap on the bobbin must lie touching both its neighbours, it is clear that the speed at which the lifter rises and falls must be in proportion to the altered length on each wrap, corresponding with the diameter of the bobbin, and therefore also with the speed of the lower cone. It is, therefore, necessary that the lifter should be driven from some part of the machine which is controlled by the cones and the differential motion.

Before going further into details, it is necessary to reconsider the relation of the bobbin to the flyer, and the ways in which the yarn may be taken up.

In open drawing the only reason that yarn can be wound on to the bobbin is that the bobbin always tends to stand still, or to revolve as much slower than the spindle, as the output of yarn by the front roller will allow.

In cone drawing it is different. Clearly, if both bobbin and flyer be driven at exactly the same speed, there will be no winding on at all. But if the bobbin goes either faster or slower than the flyer, it must take up a definite length of sliver; the only difference between its two directions of movement being, that when the bobbin goes the faster, the roving will be wound on to it from left to right, when the speed of the flyer is the greater (equivalent to the bobbin rotating in the opposite direction) the roving will be wound in the contrary direction. The amount of drag, or the amount of yarn wound on, in both cases will be exactly the same. For instance, if a bobbin 1 in. in diameter either loses or gains 35 revolutions per minute on the flyer, it will take up $35 \times 3{\cdot}14$ or 110 in. per minute. The variable speed may

therefore be either added to, or subtracted from, the positive constant spindle speed, in the differential motion.

In the appendix, for the sake of simplicity, the calculations of the constant and the variable speeds are made separately from the driving shaft to the bobbin, so that if the two be added together the speed of the bobbin may be ascertained when the strap is on any particular part of the cones; the sizes of the cones being the only figures which vary in the calculation, during the filling of any given size of bobbin with any given size of sliver (see Appendixes A and B).

The Swing Frame.—It should also be noted that in worsted boxes there are two different methods in use for conveying the varying motion to the wheels on the lifter which drives the bobbin. These wheels move up and down on the lifter with the bobbin, and it is a strange anomaly that the method in use in reducing and roving boxes is often so arranged, that it does not move the bobbins equally, at different parts of the up and down strokes of the lifter.

The action of the swing frame is faulty in most worsted boxes, and unless every user is acquainted with the possible difference between theory and practice, he will be very likely to make imperfect work from cone boxes on which it is used. It is not unusual to find the motion so far from perfect, that if the whole machine be stopped, and the lifter lowered from top to bottom, all the bobbins will make more than half a revolution during the descent, and they will revolve in the opposite direction to the same extent as they rise.

This means that if a roving frame is set correctly, without reference to the swing frame motion, so that in theory the bobbins are taking from the flyers exactly the same amount as the rollers are delivering, there will be an extension

between the rollers and the flyers of 6 in. each time the lifter falls, when the bobbins are $3\frac{1}{2}$ in. in diameter. As the lifter rises, 6 in. of slack will be left between the spindles and the roller. It is naturally impossible to run the frame with this amount of slack sliver resting on the spindle top, and unless the action of the swing frame is counteracted by some other adjustment, in the "box of tricks," for example, it will be necessary to increase the speed of the bobbins, so that on the ascent, the uptake is equal to the roller output. When this is the case the uptake is 12 in. more than spindle output, during the fall of the lifter, and therefore the length of sliver must be extended by this amount, or be broken if it is hard twisted.

As a matter of fact, it is possible to make a fine adjustment in the "box of tricks," which is usually regarded as sufficient compensation for all practical purposes. By this means the uptake can be made approximately equal to the output on both the up and the down strokes; but there is also a variation of spindle speed, occurring during different portions of each rise and fall of the lifter, as the three wheels of the swing frame motion take up different positions in regard to one another. The amount gained or lost at various parts of the stroke will necessarily vary in different machines, according to the position of the driving shaft in relation to the lifter rail.

It is possible to arrange a swing frame drive in such a way that there is no gain on the down stroke or loss on the up stroke. Frames with swing frame connections have been used in the cotton trade for many years, and the theories of the motion have been so carefully studied, that the best position for the driving shaft with relation to the lifter is

thoroughly understood. An epicyclic train of three wheels can be arranged to give a practically perfect drive, and there is also a patent four-wheel train with three links which obviates all revolution of the bobbins on account of lifter movement. Both these motions have been well known, and have been in constant use in the cotton trade for many years, and it therefore seems absurd that there should be modern boxes in the worsted trade of imperfect construction.

The figures below were obtained from a worsted box with a 10 in. traverse, and they show the amount of difference that there may be in the take-up, at different parts of the rise and fall. The bobbin of this machine revolves five-eighths of a revolution during one rise or fall of the motion, and if the bobbin be $3\frac{1}{2}$ in. in diameter, it will gain or lose on calculation—

$\frac{3}{4}$ in. during the 1st $2\frac{1}{2}$ in. of fall of the lifter
$1\frac{3}{8}$ „ „ 2nd „ „ „
$2\frac{1}{8}$ „ „ 3rd „ „ „
$2\frac{5}{8}$ „ „ last „ „ „

So that even if the traverse motion is set to give an absolutely accurate take-up for the first quarter of the descent of the lifter, the total difference between theory and practice will naturally be 4 times $\frac{3}{4}$ in., or 3 in., whereas the total gain or loss is actually no less than $7\frac{1}{8}$ in. in that time, and the difference between these figures leaves a discrepancy of $4\frac{1}{8}$ in. between theory and the best possible practice. Naturally the nearest approach of theory to

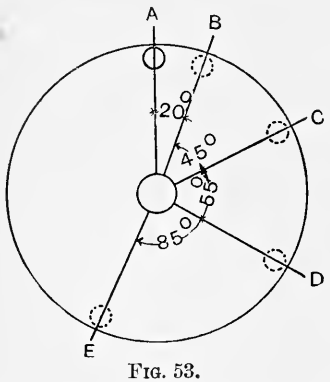

Fig. 53.

calculation would be obtained by setting for one of the middle sections; but as every quarter differs from every other quarter, it is obvious that theory and practice can never be made to fit exactly with such a motion.

The same results are shown graphically in Fig. 53, which shows how much the peg that drives the bobbin will move during each quarter of a revolution. When the lifter is at the top the peg will be in the position marked **A**, and it will move—

20° to **B** in the 1st $2\frac{1}{2}$ in. of fall.
45° „ **C** „ 2nd „
55° „ **D** „ 3rd „
85° „ **E** „ 4th „

There is naturally no means of compensating for a variation of this kind at different parts of the lifter stroke, except by structural alteration, and it must strike every reader as anomalous, that such a theoretical defect should be allowed in a machine, on which so much thought and money have been expended with the sole practical object of avoiding the slight drag which there must be in every open roving box.

Parallel Motion.—In the larger boxes the swing frame connection with the lifter rail is replaced by a much more scientific arrangement (Fig. 54). In this motion the three wheels of the swing motion are replaced by four bevel wheels, one of which rises and falls on a slotted vertical shaft, which is always running at the calculated speed.

It is easy to see that however much the lifter may rise or fall, its motion can have no effect on the rotation of the bevel wheel **D**, and consequently the bobbins will not be affected in any way by the movement of the lifter. The wheel **A** on the shaft which drives the bobbins, rises and falls with them

on the lifter, and is driven by the wheel **B**, which also rises and falls with the lifter; but **B** is driven all the time by the vertical shaft **C**, on which it is free to slide, having a key fitting into a long keyway in the shaft. This simple arrangement involves no discrepancy between theory and practice, and it is very difficult to see why some modification of it is not used as a substitute for the swing frame.

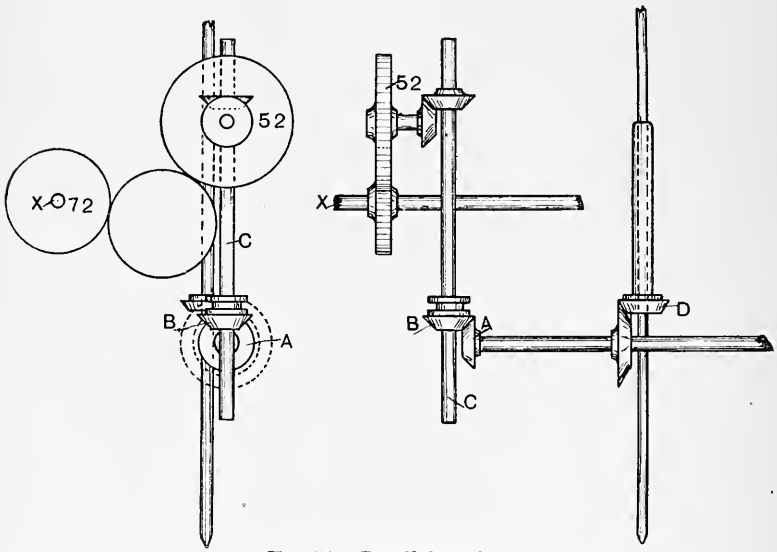

Fig. 54.—Parallel motion.

Differential Motion.—In Figs. 55, 56, and 57, the driving shaft **X** carries the two 72-teeth wheels **A** and **B**. Fig. 56 shows a bobbin drive, and Fig. 55 a spindle drive, whilst Fig. 57 is another elevation of the differential motion, the swing frame links, and the bobbin and spindle drives. **B** is keyed fast to the shaft **X**, but **A** is fixed to a sleeve which is connected to the shaft only through the differential motion **Z**, so that it can gain or lose to any desired extent on the shaft **X**, according as the drum of the differential motion **Z** (Fig. 57),

is moved round by the cone gear through the shaft **Y**. The intermediate wheels in the two trains of gearing have, of course, no bearing on the calculations; they are different in size, but with that one exception, every wheel in each train corresponds, from the wheels **A** and **B**, of 72 teeth each, on the driving shaft **X**, to the bevel wheels **C** and **D** which drive the collar

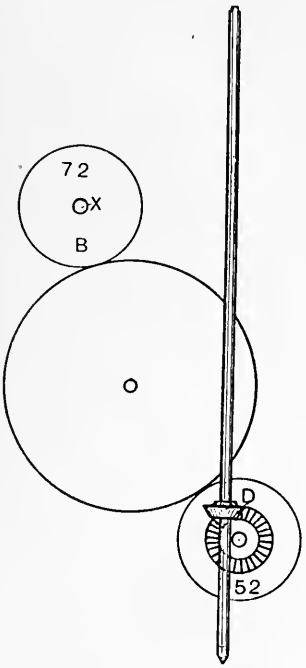

Fig. 55.—Spindle drive.

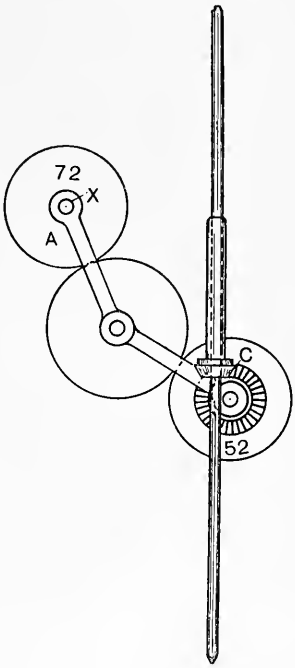

Fig. 56.—Bobbin drive.

and the spindle respectively. Therefore, when the drum of the differential gear **Z** is stationary, the spindle and the bobbin must rotate at the same speed.

Every time the cones cause the drum **Z** to revolve once, the wheel **W** with its sleeve, and the wheel **A**, make two revolutions more than the shaft **X**, causing the bobbins to

gain six and one-third revolutions on the spindle and flyer. These calculations make it appear that the spindle and the bobbin can theoretically be adjusted in exact relation to the speed of the cone, whereas it has just been shown that in practice the two speeds are not correctively relative, and

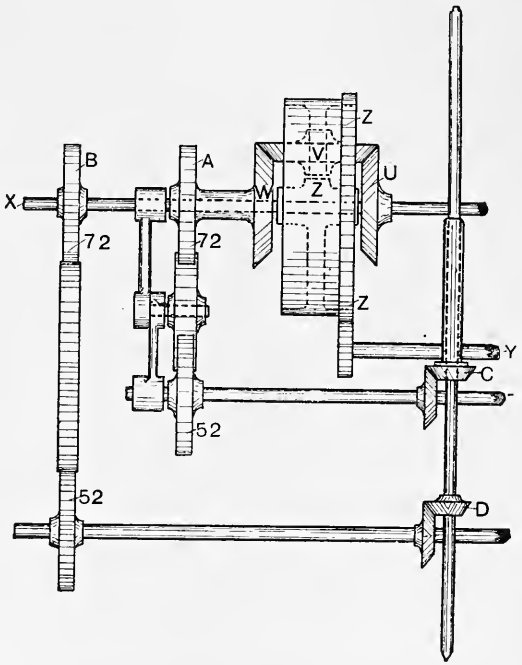

FIG. 57.—Differential motion and spindle drive.

therefore the ordinary swing frame is distinctly inferior in practice to the parallel motion which is in use in heavier boxes.

The differential gear itself is well known in many classes of machinery, and has many various uses; for the present purpose it is best regarded as acting only one part. If the three bevel wheels **U**, **V**, and **W** are of equal size, and if all have a simple rotary motion, **U** being the driver, **W** must

make the same number of revolutions as **U**, but in the reverse direction. The wheel **V**, however, does not rotate on a fixed axis, but on a shaft within the drum **Z**, and when **Z** and **V** rotate together in the same direction as **U**, every revolution of the drum **Z** reduces the speed of **W** by two revolutions. On the other hand, if it rotates against **U**, each revolution will add two revolutions to the previous speed of **W**. There is thus a means either of adding revolutions to or subtracting them from the constant speed of the bobbin, and it is only necessary to find how many revolutions of the bobbin equal one revolution of the wheel **W** to arrive at any necessary calculation.

Cones.—Although the user of cone drawing has little interest in the construction of cones, a clear understanding of the reasons for their curious shape will probably save him trouble. In the first place, the cones must never be regarded as part of the gearing that drives the spindle. This is clearly proved by the fact that if the cone belt breaks, the spindles will not stop. On the contrary, when a box is running with "flyers leading," the bobbins would increase in speed if the cones were thrown out of gear, so that the drum **Z** of the differential gear was stationary. With the cones standing, or the cone belt broken, the spindles and the bobbins must continue to rotate at exactly the same speed, so that there can be no relative movement between them, to take up the yarn as it comes from the front roller. It is the purpose of the cones to regulate this take-up with the utmost nicety.

As they can only be driven by a belt which is always of one length, their centres ought always to be equi-distant, and the sum of their diameters must be constant on any section at right angles to their common axis, so that the belt may be

equally tight on whatever part of the cones it is working. The very peculiar construction of the cones is necessary in order to obtain a uniform addition to the speed of the lower cone, from a uniform motion of the belt along their length.

It is easy to see that this cannot be obtained with rectilinear cones. If a pair were so made, tapering one inch per foot (see Fig. 58), it is true that the belt would always be equally tight, but the speed of the lower cone would be reduced from 180 revs. to 100 revs.; that is to say, the speed would be reduced by 80 revs. in moving the belt over the

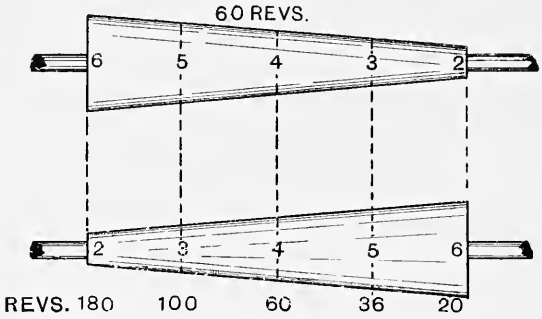

Fig. 58.

first foot, whereas the movement over the second foot would only give a reduction of 40 revs., the third 24, and the last 16. This irregular decrease would, of course, be no use whatever, and consequently the form of cone adopted, has to be of such a nature that the added diameters of the two cones are the same at any point, but they must be so curved, that the reduction of speed is uniform for each foot or inch which the belt traverses.

Fig. 59 shows a pair of cones which fulfil all these requirements. With the upper cone running at 60 revs., the lower one makes 180 revs. and 20 revs. respectively, with the belt at the extreme ends of the cones, which give a difference

of 40 revs. for each stage, of 1 foot moved by the belt. In practice the speeds would be calculated for each inch instead of for each foot of length, but the above examples serve to show the principle involved.

The same results may be obtained from cones of very varying dimensions, but it is found that the belt traverses better when they are long in proportion to their diameter. The figures given do not apply to any cone in use, but are chosen for the sake of simplicity. In setting out a pair, it is necessary to decide :—

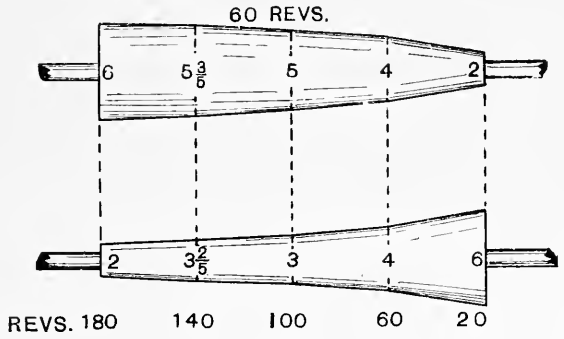

FIG. 59.

1. On a suitable speed for the upper cone.

2. On the amount of reduction in the speed of the lower cone for every foot or inch traversed by the belt, which must be in exact proportion to the increase in the size of the bobbin on the addition of every successive lap.

3. The sum of the diameters of the two cones.

Eight inches has been taken as a convenient figure for the sum of the diameters, 60 as the speed of the upper cone, and 40 revs. as the amount of reduction for every foot moved by the belt, beginning with 180 and ending with 20.

Cones have been so exhaustively discussed by other writers

in books concerning both cotton and worsted machinery, that it would be out of place to go into a detailed analysis of the formula by which their curves are designed. It is usual to employ algebraic formulæ such as those given in Mr. Buckley's excellent little book on this subject; but there are comparatively few people who think in letters, as easily as they think in figures. It may, therefore, be of interest to state the case in the simplest possible way, leaving all algebra out of the question.

In the first place, it must always be taken as an axiom, that the diameter of the lower cone at any point along its length must bear the same relation to the diameter of the upper cone, that the speed of the upper cone bears to the required speed of the lower cone. That is to say—

If the top cone is running 60 revs. per minute, and the lower cone is required to run 180, the diameter of the two must be in the proportion of 180 to 60, or 3 to 1.

Then, if 8 in. is the sum of the diameters of the two cones, it is only necessary to divide that figure into two such parts that they will bear to one another the proportion of 180 to 60. This may be done by simple arithmetic, by adding the two numbers together (to 240) to form a common denominator, and then taking $\frac{180}{240}$ of 8 and $\frac{60}{240}$ of 8.

These two fractions work out to 6 and 2 respectively.

Added together they give 8, the sum of the diameters, and when 60, the speed of the upper cone, is multiplied by 6 and divided by 2, it gives the required speed of 180 for the lower cone. Diameters at any other part of the two cones, to give any desired speed, may be found in the same way.

If the required reduction of speed is to be 40 revs. for every foot of traverse, 140, 100, 60, and 20 will be the speeds

at the points shown in Fig. 59. Thus the following figures are obtained :—

Speed of upper cone.	Required speed.	Common denominator.	Proportion.
60	140	200	$\frac{140}{200} \times 8$ to $\frac{60}{200} \times 8$, or $5\frac{3}{5}$ to $2\frac{2}{5}$
60	100	160	$\frac{100}{160} \times 8$ to $\frac{60}{160} \times 8$, or 5 to 3.
60	60	120	$\frac{60}{120} \times 8$ to $\frac{60}{120} \times 8$, or 4 to 4.
60	20	80	$\frac{20}{80} \times 8$ to $\frac{60}{80} \times 8$, or 2 to 6.

As a matter of practice it is unnecessary to work out the figures for both upper and lower cones; the one can always be obtained by subtracting the other from the sum of the two; thus $2\frac{2}{5}$ from 8 leaves $5\frac{3}{5}$.

After seeing cone machinery treated in the critical method here adopted, the reader will naturally ask himself, Why, then, is it being so rapidly introduced for worsted drawing? The answer is simple and convincing. Greater lengths of roving and reducing can be put on to larger bobbins without extra piecings, so that the cost of attending to spinning frames is thereby reduced, and if the machines are rightly made and perfectly set, an extra size of bobbins can be filled with practically no drag at all.

The question for each user to settle is, whether his staff will be able to adjust all the different parts so accurately with respect to the altered conditions of each succeeding lot of material, that practically all drag can be avoided; remembering that anything of the nature of drag in cone boxes is not only *drag*, but becomes actual *draft*.

Unless the user can answer the question with certainty

in the affirmative, it is to his interest to consider how much he will gain by having the larger size of bobbins, and reckon whether the chance of misadjustment in the more complicated machinery will outweigh its advantages in regular use, as compared with the smaller and simpler "open" machines, in which a certain amount of strain must always be present on the roving, though the conditions must be very far wrong to make the yarn visibly uneven.

CHAPTER VII

SPINNING

Any person who makes his first acquaintance with the spinning frame through the history of its invention, is almost certain to regard it, not as a single process, but as a combination of three processes, the invention of which was separated by many centuries. In this respect he will regard it more nearly in its true light than does the novice, who simply sees a complicated series of rollers, wheels, bands, pulleys, and spindles, fastened in bewildering compactness on to a single framework. For the easy understanding of the various problems at issue, it is best to divide the frame into its three essential parts, and consider them one by one in practical detail, in relation to one another, rather than to the theories of the various parts propounded in Chapter III.

In all throstle frames, four processes are in constant progress.

1. Roving is unwound from the bobbin and carried to the back rollers by means which are so simple as to be hardly worthy of mention.

2. The roving is drafted or extended by the back and front rollers, which draw the ribbon of fibres out to several times its previous length.

3. Twist is inserted into the extended roving until it is strong enough to be wound on to the bobbins.

4. By three different means, in the three different types of frame, the yarn is wound on to the bobbin during the whole time the spindle is rotating. In this winding-on process it receives the drag which is necessary to build a firm bobbin, but from the nature of things the drag is not uniform, and there are consequent disadvantages.

In early hand-spinning, each of these three processes were separate, and in the one-thread wheel the winding was not continuous. In the Saxon wheel winding became automatic and dependent on the arrangement for introducing twist, but it was not till a hundred years after the introduction of the Saxon wheel, that any attempt was made to make the drafting automatic as well. For an intelligent understanding of the practice of machine spinning, the relations of drafting, twisting, and winding on are quite as necessary as an understanding of the theories which underlie each of these separate movements.

Three objects are attained in all throstle frames.

1. By a simple arrangement of pegs on which the roving bobbins stand in such a manner, that the drag of the back rollers unwinds the roving from the bobbins with very little strain. The only thing that need be said of them is that the less strain which is put upon the roving the better.

2. As in all other drawing or drafting processes, draft depends entirely on the relation of the output of the back rollers to the output of the front rollers.

3. The twist depends on the number of turns made by the spindle during one revolution of the front roller.

4. The winding-on depends on the construction of the spindle and its adjuncts, and on the movement of the lifting motion, which continually alters the position of the bobbin in

regard to the cap, ring, or flyer. By this motion the yarn is deposited equally over all portions of the bobbin.

Having dealt in detail with the theories involved in Chapter III., it is only necessary to consider the mechanical relations of the various parts and of the wheels, bands, and belts by which they are connected, taking the most approved drafts and twists as examples, and working them out in such a way, that any other desired draft or twist can be calculated by a reader without difficulty. A general view of a spinning frame is given in Fig. 80, in which the relations of all the various parts are clearly shown.

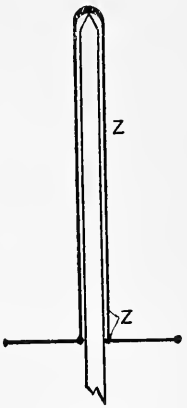

FIG. 60.

No. 1.—The pegs **A** carry the roving bobbins in such a way that the bushes at the top and bottom of the bobbin (see Fig. 16) reduce the friction against the pegs to a minimum, and the cone, which stands at the bottom of each peg is so tapered that only a very small portion of the bobbin (a circle of very small diameter) is in contact. The friction is consequently reduced to the smallest possible amount. The nearer the peg is to a vertical position, the less is the friction on it. Unless the roving is very thin and weak, there is little advantage in complicating this arrangement, but when it is desirable to spin yarn from roving containing very little twist, or to twist from soft fine yarn on a twisting frame, the peg may be turned to a fine point, on which a long tube or sleeve rests in such a way that there is practically no friction caused when it rotates. It has a broad flange at the bottom to support the bobbin, and is so arranged that the point of the spindle carries all the

weight of the bobbin and reduces friction to a minimum (see Fig. 60).

Before the roving reaches the back roller it passes through a guide which leads it to its right place in the nip. In order to guide the roving into just the right part of the back roller, each end is taken through a wire twizzle or through a slit guide, which stands on a bar two or three inches behind the back roller. If these guides were not used, the roving would always be running off the rollers and ceasing to be drafted, but the duty of keeping the end between the rollers is only a small portion of the function of the guide, for the roving is less than one-sixth of an inch in diameter even when it is under pressure, and it was found that the process of drafting this narrow ribbon of fibres caused such wear on one portion of the leather of the front roller, that a groove was quickly worn in its centre, whilst the leather on both sides was untouched.

As soon as the pressure in the middle was reduced by the thinning of the leather, the front rollers failed to draw all the fibres which came to them, so that thicker, curly yarn resulted. To obviate this rapid wear of one portion of the leather, the back guide is made to traverse slowly backwards and forwards. For example, if the face of the front roller is $1\frac{1}{8}$ in. wide, the traverse may be $\frac{3}{4}$ in.; just so much that there is no fear of the end running off the roller, although almost all parts of the surface of the roller are utilized in turn for drafting. If all parts receive an equal amount of wear, the apparatus serves its purpose well, but usually a piece of mechanism which is so small, and moves so slowly, receives but little care, and it is usually considered that an eccentric is a good enough method of supplying the reciprocating

motion to the traverse bar, although it is a well-known principle of mechanics that neither a crank nor an eccentric give a uniform speed throughout their stroke. Both systems move a rod faster in the middle than at either end of the stroke, and unless every joint is in perfect condition there is no motion at all for a perceptible time as the end reaches the sides of the roller (see p. 200, Chapter VII.).

The parts nearest to the sides of the roller are therefore subjected to the strain of drafting for a longer time than any other part of the leather, and they naturally wear away more in consequence. When long wool is being treated, the increased distance to the front roller from the guide, and also the condition of the carriers, tend to reduce the traverse and to increase the dwell at each end of the stroke; and because long wool is difficult to draw, the sides of the roller are not infrequently worn into very narrow grooves or nicks, which are quite fatal to good spinning (see Chapter XI., p. 281).

To ensure a uniform traverse speed over all portions of the roller, a heart-shaped cam or other device is necessary, and there is no doubt that where such a method is in use, the risk of nicked rollers and curly yarn is decidedly reduced.

No. 2.—The work of drafting agrees so accurately with theory, that it is necessary to add very little to what has already been said on this question, for spinning rollers are never made on the tooth and pinion principle, but are always smooth, with scratch flutes to give the necessary gripping power, and their output is consequently just about $3\frac{1}{7}$ times their diameter. For very fine botany yarns perfectly smooth rollers sometimes spin even better than those which are scratch fluted, but for the majority of qualities the extra grip afforded by the scratch surface is a decided advantage, and

this type of low roller is now universally used for both front and back low rollers.

Scratch Fluting.—People often fail to notice the fact that the scratches are irregularly disposed. Over one-half of the roller they become gradually wider and wider apart, getting closer together as the revolution is completed. This means that no two grooves are the same distance apart. If they were of equal distance, it would often happen that the diameter of the top roller would be just so much, that every time it rotated, the same portion of leather would exactly fit into one of the grooves, so that in a very brief time the leather would be pressed into a series of ridges, which would cause the yarn to stick to it and spin badly. As things are arranged, no portion of the top roller can ever come twice running over a groove, unless the upper roller is exactly the same size, or twice the diameter of the low roller; but any one who has ever seen such a roller will easily understand how useless it is.

Milled Fluting is a type of fluting which has seldom even been tried for cap, ring, or fly frames, although it is adopted in the cotton trade, and for the rollers of some worsted mules. Not only are the rollers usually very small in diameter, but the flutes occur so frequently, and are relatively so deep, that the surface of the roller almost resembles a series of ribs. These ribs are very smooth, because they are cut in wrought iron with a fine milling tool. The grip of such a roller is relatively great, and as it is satisfactory for certain uses, with such difficult materials as cotton and dry wool, there seems to be no reason why it should not also have its advantages in other departments of the trade, provided only that suitable pressing rollers are used.

The Back Rollers of a spinning frame are the only exception to the rule that small quantities of wool fibre will be cut if held between a single pair of metal rollers. Theoretically, of course, they ought to cut the fibre; but in practice, all counts from 12^s to 120^s are spun in this way, and as the roving from which 120^s are spun is thicker than 12^s yarn, it is clear that many roving boxes might also be made with their back rollers of a similar type, and it raises the interesting problem as to how far down the drawing, the same alteration might be carried with advantage, or, on the other hand, whether it would be better to have, on spinning frames, the type of rollers now always used for roving boxes.

As in all other places where roller draft is used, the output of the two low rollers are the essential figures in the calculation, and it is because their actual output is the same as their diameter multiplied by $3\frac{1}{7}$, that spinning drafts can be calculated so easily. In spinning calculations the diameter of the rollers is always used instead of the circumference, because of the simplicity of the figures, and because they bear exactly the same relation to one another, as the circumference measurements do; the latter being simply the diameters of the respective rollers multiplied by $3\frac{1}{7}$.

As this question of roller output is sometimes confusing to beginners, it may be worth while to state a draft in three different ways, to show how they all give just the same result.

When stated in terms of the complete circumference, we have a draft calculation as follows :—

$$\frac{7\frac{6}{7}'' \times 100 \times 100}{44 \times 63 \times 4\frac{5}{7}''} = 6\frac{1}{80}$$

The figures are so complicated that it is not easy to see

how they will cancel one another, and consequently a long multiplication would very likely be necessary.

But this may be stated very much more simply—

$$\frac{2\frac{1}{2}'' \times 3\frac{1}{7} \times 100 \times 100}{44 \times 63 \times 1\frac{1}{2}'' \times 3\frac{1}{7}} = 6\frac{1}{80}$$

And as the $3\frac{1}{7}$ in the top line obviously cancels the same figure in the line below, it is just as well to leave that figure out in both lines. So that the calculation always stands in practice—

$$\frac{2\frac{1}{2}'' \times 100 \times 100}{44 \times 63 \times 1\frac{1}{2}''} = 6\frac{1}{80}$$

Carriers.—The drafting arrangements of all spinning frames are so nearly alike that there is no need to go into further details in regard to any but the simplest and most general method; but it is well that the draft of each pair of carriers should not be forgotten, and the train of wheels which regulates each of them is given as a reminder that the first should keep a definite lead on the back roller, whilst the second overruns the first, but that both leads should vary, according as the draft is great or only small (see p. 206).

Upper carriers deserve much more attention than they usually receive; they should always be kept free from waste and oil, and they should never be allowed to show signs of wear, because if they are at all worn they are much more liable to retard the traverse of the end to and fro across the face of the front roller.

Output of Rollers.—It is quite possible that at first sight some students will conclude that an alteration in the size of the top front roller will alter the output of the box, but this is, of course, a mistake, because the top rollers are simply

driven by friction, and their surface traverse is exactly the same as that of the low roller, against which they are pressed, and from which they receive their motion. In the drawing boxes the amount of sliver passing between the back rollers separates them so far that there is no friction left between the upper and lower rollers, and when they are in work the upper roller as well as the lower rollers have to be driven round by wheels, lest they should slip; but in a spinning frame the amount of fibre passing between the two front rollers is so small, and the elasticity of the roller covering is such, that the fibres are really squeezed into the substance of the leather, and carried through the nip without separating those parts of the surface where there are no fibres. Being thus always in partial contact, the upper roller has no inclination to slip on the lower one, and therefore the surface traverse of its circumference must always be the same as that of the low roller, no matter what the size of the upper roller may be. For example, if rollers of 3 in. diameter and 5 in. diameter are put on to the same frame, spinning single 60^s, with a 4 in. low front roller, the yarn produced by all of them will be found to be exactly alike in weight, if the pressure on each is made to suit its altered diameter. This makes it worthy of notice that large upper rollers will always draw with less weight on their bearings than small ones, because the same area of contact will be obtained with less pressure, and it is therefore clear that if there are two frames equally efficient, if one have large rollers and one small, the latter will take the most driving, because the increased pressure necessary to get the same amount of grip, must mean increased friction all through the machine.

Pressing Rollers.—Almost every statement made in regard

to top front rollers in drawing may be applied with equal truth to the spinning process. For very long wools and mohair, the rollers are soft covered, whilst for botany and fine crossbreds, hard leather, glued on to iron or wood bosses, is almost invariably used. Probably a very large majority of all the rollers now running are made of wood, but since means have been found to stick leather so securely to iron that no amount of rotation under pressure will wear it loose, the majority of rollers for new frames are now being made entirely of metal, covered with layers of leather, both of which are accurately turned up in a lathe, and the surface of the top layer polished. Hard, oak-tanned ox hide is still considered by most people to be the most springy and durable for the purpose; but some brands of the blue-grey, chrome-tanned leather are now very good, and their elasticity is bringing them rapidly into favour (see Appendix C.).

In the chapter on defects and remedies, it is pointed out that if any portion of leather gets detached from the wood or iron boss, the loose or "bellassed" portion does not draw properly, and the roller will make uneven yarn; but that a soft roller, which is only a roller with the whole of its leather bellassed, or loose from the boss, will draw a perfect thread when working on the same frame side by side with a hard roller. Soft rollers are made either of iron or wood, and to give the surface greater elasticity than hard rollers, they should have a layer of thick felted cloth, over which the leather is tightly stretched, and fastened by means of tacks or string as the case may be. All fastenings must naturally be done entirely on the side, and not on the surface of the roller, because any peg or stitching would give extra inequality of surface, which might cause uneven drafting, and

for this reason the amount of leather used in fastening is so considerable, that most soft rollers need quite as much leather to cover them as a hard roller, double covered.

From the nature of their construction it is quite impossible to turn up a soft roller after covering, and consequently they are run much less true, than do rollers which are hard covered, turned and polished (see Appendix C.).

Repairs.—There is no point in the process of spinning where the question of up-keep is as prominent, as in the levelling of spinning frames. In modern frames it is not uncommon to have rollers for a hundred spindles in one or two lengths only, supported by twelve or fourteen bearings along the entire length of the frame, and from the nature of things it follows, that so long a line, depending for its rigidity on a wooden floor, as is generally the case, must soon have one or more of the brasses out of line, above or below the majority. In the case of frames that are built with all their joints milled, this tendency is greatly reduced, because the frame is so rigid that if any small portion of the floor should give way slightly, the frame bearers will not necessarily follow, and the line of rollers will remain straight, when a frame is as much as twenty-five or more feet between the end bearers. It stands to reason that in the course of years a wooden floor, in even the best built mills, will give way to a certain extent, and the rollers are then certain to be bent more or less. In that case they must be subjected to very severe strains during rotation, which are so injurious to the machinery that it is no uncommon thing for a roller to break clean across, or "twist in two" as it is accurately described in common parlance.

In such a case, no work can go on again, until the roller

is repaired, but minor faults can occur which may cause deficient, or unequal drafting, and consequently cause trouble later on. For example, if one bearer sinks slightly, the brass nearest to it will naturally be relieved from the weight of the roller, whilst the brasses on both sides will have their work increased, so that they will wear away faster in proportion, and in a short time, the front roller will be "down" at that place. The carrier stands will also be affected in a less degree, because the greater speed and weight of the front roller will make it wear down faster, and consequently the whole series of the back roller, the carriers, and the front roller will be out of line, not only longitudinally, but transversely as well. If this occurs to any serious extent it will increase the strain on the fibres, because the drafting will pull them down on to the faces of the carriers, and therefore, both in the interests of economy and good work, frames should always be kept absolutely "in line." It will certainly increase their length of life, and they will tend to turn out better work.

How far it is advantageous to continue repairing old machinery instead of buying new of a similar type, is a question for each practical man to settle for himself. Clearly a firm which spends its money in mechanics' wages to keep machinery always efficient, will not have as much to spare for new plant. There is always a tendency to squeeze new machines into smaller compass than their predecessors, but space has its equivalent in rent, and if we suppose that the man who spends his money in repairs can run his spindles as fast as those in new frames, he will still be handicapped in the matter of rent, unless by saving expenditure, he has accumulated capital equivalent to pay for it. Of course no one would ever dream of leaving new machinery entirely

unrepaired, until it was broken up and replaced by a more modern type. Such a practice would be extravagant in the extreme, unless for a part of its life the machinery was allowed to make bad work. All machinery must be repaired periodically; the difficulty is, to decide when to stop repairing and buy new machines. Probably the most economical length of life for a machine will depend upon the improvements which are being effected in the construction of similar types, and for this reason every spinner must judge of the life of each machine upon its merits.

No. 3. **Twist.**—The process of putting twist into yarn is one which has received a great deal of practical attention, because it involves a definite relation between the speed of the front roller and the spindle, and because the speed of every frame is limited by the speed at which it is possible to run the spindle. This limit of speed, in ring and cap spindles is seldom due to mechanical laws which make further increase of speed impossible, but more frequently because the various influences exerted by the air, upon the thread, become too powerful when the spindles are running above a certain speed, or else because the combined effects of air resistance and increased vibration increase so very rapidly above 7000 revolutions per minute.

Fly spindles, on the contrary, are so difficult to balance that it is their great vibration at high speeds (of over 3600), and not the effects of the air on the fibre, that limits the speed at which it is possible to run them.

This statement may be emphasized in regard to cap yarn by a very simple example. Suppose a sample of $^1/60^s$ with 10 turns per inch, for fine dress goods, is spun on a frame with spindles running 6000 revolutions per minute, and

makes a good piece when sold to the manufacturer. Such a frame of 200 spindles would do about 333 lbs. per week. Before the manufacturer comes to buy the further quantity from the same lot, the spinner has found that he can run his spindles at 8000 revolutions per minute, and so turn out 444 lbs. per week, reducing the cost of his yarn by perhaps twopence per gross. If the yarn is spun from the same quality at the higher speed, the increase in drag will probably make the yarn break down more in consequence, and the increased speed will certainly have increased the hairiness of the yarn, so that when it is woven the piece will not have the same appearance, and the yarn will be rejected. On the other hand, if the spindles had been run at some intermediate speed of say 7200, the frame would have turned out 388 lbs. per week, saving about $1\frac{1}{4}d.$ in wages without making any serious alteration either in appearance or spin. In other words, it is necessary to find the medium speed at which cost is not too high, whilst vibration and air resistance are reduced as far as possible.

The output of the frame and the consequent cost of production vary in exact ratio to the spindle speed within certain limits. No one can say definitely what this limit of speed should be, because so many facts have to be considered; but with modern machinery in good condition, 7200 may be taken as over the average for fine, soft, single yarns, because the twist necessary to make them stand the strain involved by this speed would probably have to be increased from 10 to 12 turns per inch, and at 12 turns the output would be exactly the same with 7200 revolutions as with 10 turns per inch and 6000 revolutions, and it goes without saying that the yarn made at the higher speed would be rougher.

The spindles themselves do not regulate output, and to speak of a frame in terms of spindle revolutions, often conveys entirely wrong impressions, for output is limited finally, by the speed of the low front roller, and it is the number of inches, yards, or grosses which are turned out by the front roller that regulates the cost of spinning per gross. It is obvious that every alteration in twist will necessitate an alteration in the speed, either of the front roller, or the spindle, in order to alter their relation to one another, and as the speed at which the frame can be run is limited by the spindles, they must always be kept rotating at the highest efficiency speed, and all alterations of ratio between them and the rollers must be made by altering the speed of the rollers. This is done by changing the twist wheel, and all modern frames are so constructed that with any given driving pulley on the frame, the speed of the roller is in direct proportion to the number of teeth in the twist wheel (see p. 207).

This makes the teeth of the twist wheel an exact indication of the speed in the front roller, if the spindles and cylinders always revolve at a uniform speed ; but as the speed of the spindles, and the speed of the whole frame in consequence, is altered for various reasons, the size of the driving pulleys or the speed of the cylinder must always be noticed as well as the size of the twist wheel. From these two factors the output of the frame in a week can easily be calculated, if it is kept running, and no time is wasted in doffing or changing ; but as a matter of fact, nearly all frames do stand more than is calculated for, and many firms now employ " clocks " or counters on the shaft of the front roller, which show at the end of the week exactly how many

revolutions have been made in the 56 hours, or how many grosses the frame has turned out in the same time. A comparison of the various frames with one another will show if any of them has stood longer than it ought to have done; and where counts are fairly uniform, if the figures from every frame in a room be added together and divided into the wages paid, the result will give a most accurate guide to the total cost of production, and will be a useful indication of the efficiency of various overlookers to keep down the cost of wages per gross.

Owing to the fact that the speed limit of every different class of spindle must vary with the size and quality of the yarn being spun, it is clearly impossible to give any statistics except of the very broadest nature, and as such figures are of little use to anybody, nothing will be added to the particulars given for each spinning frame on pages 206 and 207, where typical cases are illustrated. These illustrations may be taken as accurate for some class of yarn, but as different firms prefer to work similar qualities at different speeds, each practical man must consider at which speed he will attain that compromise between smoothness, softness of twist and output, which suits his purpose best.

No. 4. **Winding on.**—It is a peculiarity of all throstle frames that the winding of yarn on to the bobbin continues slowly, all the time that the spindle is whirling round at 6000 revolutions or more per minute, and the arrangement is such that whilst the circumference of a $1\frac{1}{2}$-in. bobbin moves 786 yds. per minute, only 11 yds. are wound on to it.

In cap spindles this is accomplished solely by the agency of air resistance, and in ring spindles the same force is the chief factor in the process, because the rotation of the end is retarded just sufficiently for the bobbin to take

up the amount of yarn that is paid out by the front roller, however much that may be, and however fast the spindle may rotate. This was described in detail in the chapter on spindle theories.

There is one point of practice which deserves attention here, because there must always be a slight difference between calculation and actual turns inserted by this means. It is clear that if a front roller is paying out 11 yds. per minute or 396 in., a 1-in. bobbin would have to rotate 126 revolutions in order to wind on the yarn as it came from the rollers. At that speed *no twist at all* would be put into the thread, and it would not gyrate round the cap, so that when the spindle is running at full speed, say 6000 revolutions, the balloon will only be making 6000 minus 126, or 5874 gyrations per minute, which is a loss of rather over 2 per cent. In a yarn of ten turns per inch this is, of course, only one-fifth of a turn, and not worthy of consideration; but when the front rollers are making 120 revolutions per minute, as would be the case with 18^s or 20^s yarn, the loss would be 8 per cent., and it is only because the difference is less easy to see in the thicker yarn, that it receives so little attention in practice.

In fly spindles the twist is determined by the speed of the flyer, which is constant; whilst the speed of the bobbin is determined by the take-up, and is variable. Hence, if a very thick yarn were spun on both cap and fly spindles, the fly yarn would contain 8 per cent. more twist than the cap yarn if the calculation twist on both frames were exactly alike.

Lifter Motions.—Apart from the effect of the lifter motion on the drag, which is described in the chapter on the theory of spindles, it is most essential that the speed and length of stroke of a lifter should be made to suit the different classes

of yarn with which the frame is to deal. For this purpose the spinner must first decide for himself what speeds and dimensions are best suited to his purpose, and then arrange to make his machinery give the desired results. To understand this question fully, it is necessary to understand also why spools are used in preference to straight wound bobbins, a spool being a bobbin on to which the yarn is wound in conical layers, as in Fig. 64, whilst the layers on a parallel bobbin are all wound one on to the top of another parallel with the spindles.

Spools are designed for use in shuttles, so that the yarn can unwind at any speed, without the bobbin rotating and without putting any appreciable drag on to the yarn. In order to attain these ends it is necessary—

1. That the yarn should unwind or slip over the nose of the bobbin; and

2. That in so doing it must not rub against the yarn which remains on the spool, because that would cause sufficient friction to break it, even if it were pulled through an eye 2 in. from the end of the spool. In a parallel wound bobbin (see Fig. 61) it is clear that as the yarn unwinds it will run easily from one end **A** to the eye, but when unwinding from the other end **B** it is equally clear that all the thread between **A** and **B** will have to move round the bobbin, as well as moving forward, in contact with the fibres of the yarn still on the bobbin. In fine single yarns this friction would break the thread, and therefore some means had to be adopted to remove the friction. Any one who will trouble to draw the yarn off a 5-in. bobbin

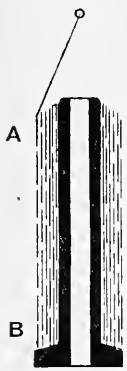

Fig. 61.

1 in. in diameter in this way will at once understand the difficulty, much better than by any mere study of the diagrams here given, for although they show the relative positions of the thread, they do not give any idea of the rotary motion caused by unwinding, and it is the rotary motion, not the movement lengthwise, which causes the trouble.

A theoretically perfect bobbin for the purpose would be one built with the layers of yarn at right angles to the axis (see Fig. 62), but, in the first place, such a bobbin could never be built; and, in the second, a large proportion of the yarn

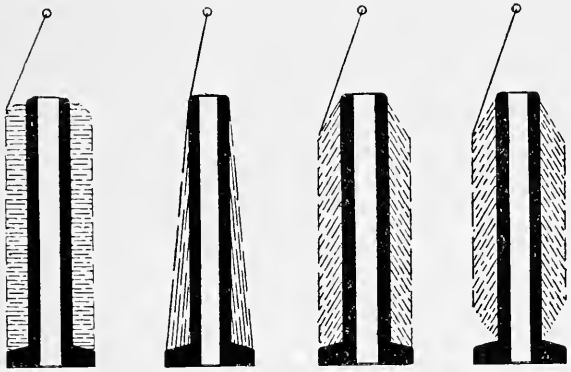

Fig. 62. Fig. 63. Fig. 64. Fig. 65.

would fall over the nose of the spool before it could be used; a compromise had, therefore, to be adopted between parallel and vertical winding, and in all spool bobbins, yarn is built on at an angle. The angle ought to be such that when the yarn is drawn straight out from the thickest part of the spool to the eye, it will be quite clear of all other strands of yarn on the spool, but as this simple rule gives a great deal of latitude, it will be best to consider a few typical cases, and compare their various merits and defects.

Doubtless the first variation from parallel winding would

be a slight inclination of the whole outer face of the spool (Fig. 63), so that there would be no actual pressure of the moving thread on the layers of yarn on the spool. But a bobbin built in this way would hold very little yarn indeed, and although the pressure of the moving thread would be removed from the yarn near to the nose of the spool, it would not be clear of the fibres or "beard" on the spool, and it would receive considerable drag in consequence. The obvious way to reduce the friction further was to increase the angle at which the yarn lay, but as this could not be done over the whole length of the spool, it doubtless occurred to hand spinners to adopt a rough method of winding, of which the modern spool is the outcome (Fig. 64).

When the yarn is built on to a bare spindle for cops, it will wind easily from almost any angle, but on bobbins, the steeper the angle, the greater will be the freedom from friction, and the larger amount will each bobbin hold; but the angle of slope which can be adopted is limited in practice by the impossibility of building beyond 45°, and, what is still more important, by the fact that if the slope exceeds 30° or 35°, rings composed of two or more strands of yarn are liable to slip off altogether from the bobbin, and go forward into the piece, as loops and extra thick places, which will be sure to cause serious damage to the cloth. As in many other places, we are here confronted with two exactly opposite needs.

First, to reduce the friction, and to increase the amount of yarn on the bobbin, it is desirable to have a very steep slope; but, on the contrary,

Second, to prevent the yarn slipping off unduly fast, a slope of 20° would probably be the best; and therefore some compromise between the two has to be made. For various

reasons different spinners use different angles and lengths of pick, to suit the many different classes of yarn which they prepare.

The caps used for this purpose are of two kinds.

For all double-headed bobbins the caps must have parallel sides, so that the upper head of the bobbin can go right up into it when the lifter is at the top of the stroke (see Fig. 66). A cap of the same shape, but of smaller diameter, was also used for spools until about ten years ago (Fig. 67).

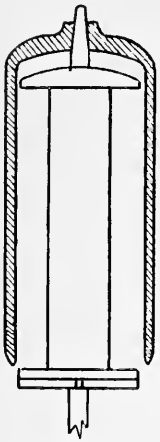

Fig. 66.

Fig. 67.

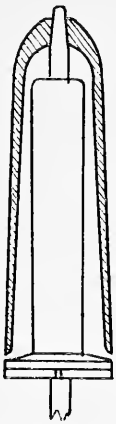

Fig. 68.

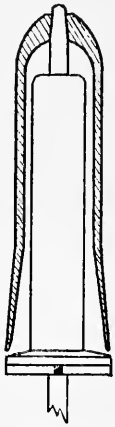

Fig. 69.

Now, on the other hand, caps for spool spinning are almost always made bell-mouthed (see Fig. 69).

The bell-mouthed, or, as it is better known, the "bell cap," was originally designed to reduce the friction which always takes place between the yarn and the outer surface of the cap. When the yarn (balloon) is not flying clear of the cap, but is "licking," as described in Chapter III., it is clear that the tendency to "lick" must be reduced by making the upper portion of the cap only just large enough in diameter to admit

the spool barrel, because the centrifugal force developed in the balloon must tend to swing the yarn in a direction exactly the reverse of that in which the cap slopes.

The first alteration from a cap with parallel sides was one of conical shape (see Fig. 68). This in itself was a slight improvement on the original shape, but the bell cap, which was evolved from it, gives even more general satisfaction.

In spite of its construction, the tendency to "lick" is so strong in some kinds of yarn, that the balloon appears to adhere to the surface of a bell cap, for more than an inch from its rim, under certain circumstances. Although this is sometimes the case, the bell cap may be said distinctly to reduce the surface friction, and it is now almost universally supplied for botany spool spinning, especially for fine counts with few turns of twist.

Lifter Motions.—In cap and fly frames, the cap and flyer are instrumental in guiding the yarn on to the various parts of the bobbin, although they do not rise and fall. In both cases the bobbin or spool is moved by the lifter motion up and down, in such a way as to make the yarn wind on to it in layers, arranged as desired, either parallel or conical. In these cases, when the bobbin is at its highest point, the yarn is being wound on to the bottom of the bobbin, and *vice versâ;* but with ring frames it is quite different, the bobbin is stationary as regards traverse, and the ring and ring rail rise and fall so as to guide the yarn on to all parts of the bobbin. With this exception, the lifters in all different kinds of frame may be said to be alike, and it is now so common to spin on to spools for two folding that nearly all frames are provided with the necessary motion.

Hodgson's Motion.—Some years ago a good many frames

might still have been found fitted with a lifter motion which was known as Hodgson's. It consisted of a curious spiral disc cam, on which a bowl travelled as the disc rotated. This bowl was fixed to a lever in such a way that it communicated a reciprocating motion to the lifter rail, at the same time allowing it to descend gradually. It was an ingenious arrangement, giving a different length of stroke for every pick, until the bottom of the bobbin was perfectly built, and then continuing regular until the bobbin was full; but, unfortunately, it allowed of little or no adjustment, so that the length and number of picks could not be altered, and when any portion was worn away, the whole thing had to be renewed.

The cam is shown in three positions in Figs. 70, 71, and 72. In Fig. 70 it is seen from above, with the bowl **B** on the outer circle of the cam, which may well be likened to a spiral switchback railway, over which the bowl moves. In reality the bowl does not move forward at all, but rises and falls as the undulations of the rail, or cam, move under it, and it keeps its place on the rail by moving along the rod on which it swings to and fro, and on which it rotates. When a bobbin is empty at the lifter at the top, the bowl is at the centre of the cam **A**, and as the undulations of the cam are less at that part, the rise and fall of the bowl are then short, for the formation of the short picks near to the bobbin-head; but, as the rotation continues, the bowl comes to deeper and deeper undulations, which give a steadily increasing length of pick to the lifter, until the full length of pick is reached, when the bowl gets on to the outer ring of the cam, on which it continues to rise and fall until the bobbin is full.

In addition to this motion it is, of course, necessary to

allow of a steady descent of the whole lifter plate, and this is secured through the bowl, by allowing the plate to recede slowly throughout the whole time the spool is filling. The plate cam is free to move backwards several inches, and is always pressed in that direction by the pressure of the bowl against it, but the horizontal position of the plate is determined by a cam **D**, shaped like half a heart, against which it rests. This cam might be driven by screw or other gear so as to be adjustable in speed, but in practice it has teeth on its outer edge, which gear into a worm on the back of the cam, and as the position of the heart is altered by the movements of this

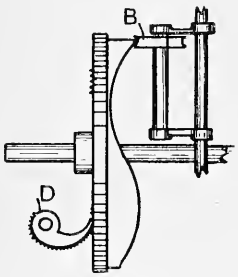

Fig. 70.

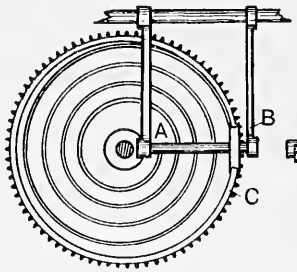

Fig. 71.

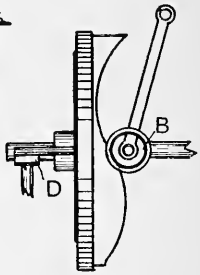

Fig. 72.

worm, the plate cam is allowed to move backwards, and as the bowl follows it, the lifter rail is lowered. The half heart **D** has about thirty teeth on its surface, and as it moves one tooth for each revolution of the worm, it follows that if there are four undulations on the outer ring of the lifter cam, there must be 4×30, or 120 picks of the lifter in a doffing, and it is one of the greatest drawbacks of the Hodgson motion that this relation cannot be altered.

By counting the number of undulations on the spiral cam, we find that, before the full length of pick is reached, the machine has made 14 shorter picks, varying in length from

$\frac{3}{8}$ to $1\frac{1}{2}$ in. In order to fill a $4\frac{1}{2}$ spool with a $1\frac{1}{2}$-in. pick, it is clear that the lifter must fall 3 in. after the long pick is reached; that is to say, it will fall $\frac{3}{120}$ or $\frac{1}{40}$ in. for every pick which is put on to the bobbin, including the short picks. But if the head of the bobbin is to be properly filled, it is essential that the lifter should rise to the same point at every pick until the short picks are completed (see Fig. 64); for if each successive short pick ended $\frac{1}{40}$ above its predecessor, it is clear that the last one would be $\frac{14}{40}$ or $\frac{3}{8}$ in. above the first (see Fig. 65), and the bobbin would hold less than its full quantity. Unfortunately, it is very difficult to make a motion which would be stationary for part of the time the frame was run, only coming into action when the long picks were reached, and a compensating motion has therefore to be arranged, to bring the bottom of each short pick to exactly the same point, although the cam wheel is retiring throughout the whole time that the frame runs.

Scaife's Motion.—In modern frames the Hodgson motion and, indeed, all others, have given place to Scaife's lifting motion, a piece of machinery undoubtedly worthy of the monopoly that it enjoys. It really contains three distinct mechanisms, each of which is capable of adjustment and alteration of speed, so that any possible modification of straight or spool-built bobbins can be turned out from the same frame. It consists—

1. Of a heart-shaped cam motion, which gives the quick $1\frac{1}{2}$ to 2-in. stroke.
2. An adjustment which alters this short stroke, so that when a spool is quite empty the stroke is only about $\frac{3}{8}$ in. in length, increasing steadily until it reaches its full length, just at the time that the full thickness

of the spool is first attained. If preferred, this motion may remain quite inoperative, so that the shape of the spool may resemble that of a paper tube (Fig. 65).

3. There is a screw motion which comes into operation only when the quick stroke has reached its full length, and then continues quite independent of the other movements until the spool is full.

No. 1.—If a frame be turning out 600 in. per minute, with 10 turns per inch, it is clear that the 10-in. cylinder will also be running 600 revolutions per minute, if the wharles are 1 in. in diameter. The calculation on p. 206 shows that the heart shaft on such a frame would revolve $3\frac{1}{5}$ revolutions in the same time, or once for every 171 in. turned out by the rollers. It is, however, one of the greatest advantages of this motion that this and all other figures can be altered to almost any extent by simple alterations of the wheels employed.

No. 2.—The method of altering the length of the pick is also adjustable; the varying length of stroke being obtained through a combination of two levers with their fulcrums at opposite ends, so arranged that the point at which they bear upon one another is continually altered, during the alteration from the short to the long pick. If the heart **C** (Fig. 73) has a stroke of $\frac{3}{4}$ in., it is clear that the bowl against which it works and the lever **L** will also swing backwards and forwards the same distance (at a point opposite the centre of the bowl) all the time the frame is running. This lever communicates its motion to a second lever, **M**, by means of another bowl, **A**, fixed on a slide **S**, which is moved slowly down the lever **M** by the wheel **W** on the screw-shaft. When the bobbin is empty and the lifter at the top, the slide

S is also wound up to the top position, so that it is pressed against the lever **L** halfway between its fulcrum and the bowl. That portion of the lever will, therefore, lift $\frac{3}{8}$ in., and will communicate its motion to the lever **M** at a point which is $\frac{3}{4}$ of its total length, distant from the fulcrum, and for this reason the top of the lever **M** and the lifter plate will therefore move $\frac{4}{3} \times \frac{3}{8} = \frac{1}{2}$ in.

As the head of the spool is filled, the slide and bowl **A** descend along the lever until **A** is halfway down **M**. During this process the length of the stroke, where the screw is

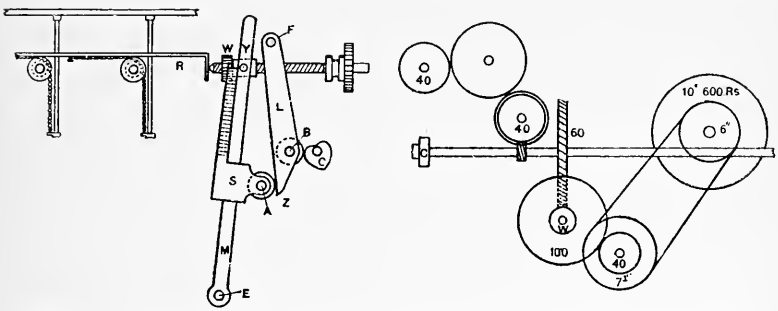

FIG. 73.

fixed to the lever, is steadily increasing, so that when **A** reaches its lowest position the stroke of the screw has extended to 2 in., because—

The distance from **Z** to **F** is $\frac{4}{3}$ times the length of **F – B**,

And the distance from **Z** to **E** is half the distance **E – Y**,

Therefore the point **Y** moves $\frac{3}{4} \times \frac{4}{3} \times \frac{2}{1} = 2$ in.

As in many other cases, it will not be very easy for the student fully to comprehend all that is involved in this explanation, without making himself acquainted with the working of a Scaife motion in practice; but if he tries a few experiments relative to the length of stroke of the heart

and lifter rail, with the slide in various positions, he will quickly understand the meaning of the above figures, and will be able to adjust the motion of any frame to suit his own convenience.

No. 3.—The slow lowering motion is driven from the heart shaft, by means of a screw and three 40-teethed wheels, which means that the screw will make $\frac{1}{40}$ revolution for each pick or revolution of the heart shaft, so that it will give exactly the same ratio of pick to traverse as in the illustration given of the Hodgson motion; but in this case the relation of the two speeds can be altered exactly as desired, by putting a larger or smaller wheel in place of one of the 40s. Such an alteration will cause the screw shaft to move faster, so that the wheel **W** will lift the rack in a shorter time, and will increase the length of stroke quickly in proportion.

If an 80-change wheel were put on instead of a 40, the short picks would increase their length from $\frac{3}{8}$ to 2 in. in just half the time required with a 40, and the total amount of lowering of the rail would be $\frac{1}{20}$ instead of $\frac{1}{40}$ for every pick of the heart, so that the traverse would be completed in just half the time, and the bobbins would only contain half their proper quantity. The relation of all these various figures can, however, be easily altered, either by changing the size of the wheel **W**, or altering the pitch of the screw. If a double-thread screw is in use with a 40-change wheel, it is clear that it will give exactly the same fall per minute, as would a single thread, with an 80-change wheel. Whilst at the same time the revolutions of the screw shaft and the wheel would be quite different, and the alteration from a $\frac{3}{8}$ to a 2-in. pick can therefore be made in half the time, without necessarily altering the total speed of the lifter and the total

amount of yarn on the spool. All that will have been altered will have been the angle at which the layers of yarn lie in regard to the barrel of the bobbin, and the faster the screw revolves the gentler will be the angle of this slope.

The reader will have observed that when the bobbin is empty and the lifter at the top, the rack, slide, and bowl **A** are also at their highest point, in gear with the wheel **W**, and that, as the screw shaft and wheel revolve, the rack is gradually lowered until the wheel has made one revolution, when a large tooth which it contains, together with the screw motion of the shaft, throw a wheel out of gear and leave the rack stationary, so that the length of pick is constant for the remainder of the doffing.

In this description we have discussed a combination of two motions, the one short and quick, the other slow and continuous, as if it were quite a simple matter, but if the reader will try to make any arrangement which will achieve this end, he will find that it is far from simple. In Scaife's motion the screw which lowers the rail passes through a hinged screw plate **Y** fixed at the top of the lever **M**, so that the end of the rail can rest against the end of the screw. When the rail is at the top, the screw protrudes say $4\frac{1}{2}$ in. beyond the lever, and by its own slow rotation it retreats $3\frac{1}{2}$ in. during the doffing, until its point is only 1 in. beyond the lever.

This slow unscrewing through the rapidly moving lever naturally gives a very complicated motion to the screw shaft. It is constantly rocking and rotating, as well as steadily moving backwards, and in order to keep it in gear with the chain of wheels that move it round, it contains a long keyway parallel with its axis, so that it is free to slip in and out

through the wheel which drives it, whilst the key within this wheel fits loosely into the keyway and gives the necessary rotary motion.

In old-fashioned frames the screw shaft carried a hand wheel on its extremity, which of necessity projected at times far beyond the end of the frame and moved backwards and forwards with the screw. In the most recent patterns, the hand wheel is attached to the toothed wheel on a long collar which projects within the frame, in such a way that there is no need for the screw shaft to extend beyond the frame end.

Heart-shaped Cams are devised for the special purpose of transforming a universal rotary motion into a horizontal or vertical reciprocating motion, in which the whole of the up and down strokes are traversed at exactly the same speed, and are so arranged that there is absolutely no dwell, or space of time when the motion is stationary at the point where the direction is reversed.

Probably the simplest way of regarding the subject is to consider the action of a true wheel or circular cam, acting on a bowl, as compared with the action of a crank pin, eccentric and heart motions when used as cams, not coupled with connecting rods. It must be clear to every one, that if the wheel revolves on its own centre, the position of a bowl resting upon it will remain unchanged, no matter through how many degrees the wheel rotates; but if the wheel be so arranged that it revolves round some point which is not its own centre, so that it is in fact eccentric, the bowl will rise and fall for a distance equal to the difference between the shortest and longest radii of the eccentric. That is to say, that if the circle **ABC** (Fig. 77) be caused to rotate on the point **E**, instead of round its own centre **D**, its stroke would

be equal to the length of **EA** minus that of the shortest radius **EB**.

This is the same in all cams, but the eccentric and crank transform a regular rotary motion into a reciprocating motion which differs in speed at different parts of its stroke.

Of the means used to obtain a reciprocating motion from a crank pin, the slot-headed sliding rod is the simplest and best because it gives a perfectly harmonic motion, and has the fewest moving parts; but it is unsuitable for heavy work because of the large amount of sliding friction which is always present (see Fig. 74).

The ordinary connecting rod is always used for the trans-

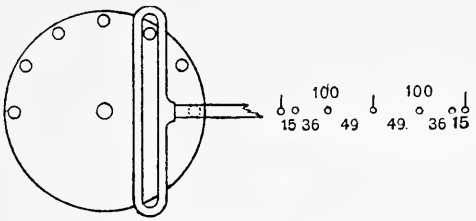

Fig. 74.

mission of heavy strains (as in steam engines), but the angle which the connecting rod takes up in regard to the crank pin and the piston rod, makes the speed of the reciprocating motion different at opposite ends of the stroke. For instance, if the crank is rotating once a minute, it will traverse 30° in 5 seconds, and the spaces between the irregular line of dots in Fig. 75 will indicate the distance which the piston moves at consecutive periods of 5 seconds. These distances will vary according to the length of the connecting rod. A harmonic figure would be made with a connecting rod of infinite length, but as it is impossible to use such a connection in practice, this mechanism can never give a motion in which

the speeds at opposite ends of the stroke are equal (a simple harmonic motion), but a slot-headed sliding rod (Fig. 74) will give exactly the same result at both ends, because the rod must always move horizontally; and as the crank revolves, parallel lines drawn through the positions of the crank pin at equal intervals, must show the length of stroke during that time (see Perry's "Applied Mechanic," p. 222).

An eccentric and its rod may also be regarded as a crank and connecting rod in which the length of crank is the distance between the axis round which the eccentric revolves, and its true centre. This will, of course, give exactly the same figure as a crank proper, and if it were used for a lifting

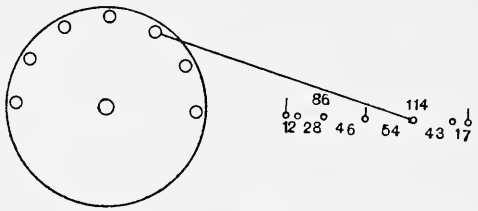

Fig. 75.

motion it would therefore build a bobbin thin in the middle, thick at one end, and thicker still at the other, but in the practice of machine construction the eccentric is nearly always used as a cam, and this involves more complicated considerations.

The stroke of a cam working against a flat foot, or a bowl, is always equal to the distance between its longest and shortest radii, that is the difference between **AE** and **EB** (Fig. 77).

To build a perfect bobbin it is necessary that the yarn should move over every portion of the traverse, with exactly equal speed, and to attain this end, it is necessary that for

every 30° which the cam revolves it shall force a bowl an equal distance from its centre. Almost any distance may be selected without relation to the diameter of the cam or heart. To construct such a cam it is only necessary to draw a number of radii at equal angles from any point, let them be say 30° apart, and on one of them (**B**, Fig. 76) mark off a certain length and describe a circle which will cut the point on the cam where the periphery comes nearest to the centre. If it is desired that the total stroke of the cam shall be 3 in., its periphery must be $\frac{1}{2}$ in. further from the centre on each radial line, with radial lines 30° apart, and if these half inches are

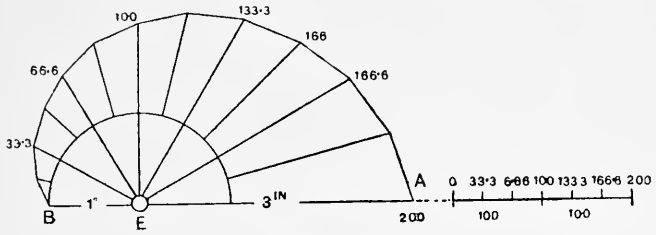

Fig. 76.

marked off on succeeding radii, each $\frac{1}{2}$ in. further from the centre than the last, and connected with one another, an angular cam will be built up, which will give the desired results. In designing such a cam for practical use the circle would, of course, be divided into many more degrees, so that the angles on the surface would be much less acute and more easily rounded off, to give a steady motion.

In order thoroughly to understand the movement given by an eccentric, we must examine it as if it were a cam, and it must, therefore, be judged on the principle just stated. Let us see what the result would be if the end of a radius of the circle **EB** represents the point at which the periphery of the

eccentric is nearest to the centre **E**, and the point where the largest circle is farthest from that centre, is exactly opposite to it at **A**. It follows that the difference between the two radii is equal to the total stroke of the cam, and if the circle is divided into angles of 30°, the distance between the large circle and the small circle on each radius, shows the distance that the eccentric will move the bowl, in each 5 sec.

If these figures are plotted out in the line formed, it will show that a similar amount of rotation at opposite ends of the stroke give very different lengths of parallel motion, that no two sections of the stroke are similar, and that a movement of

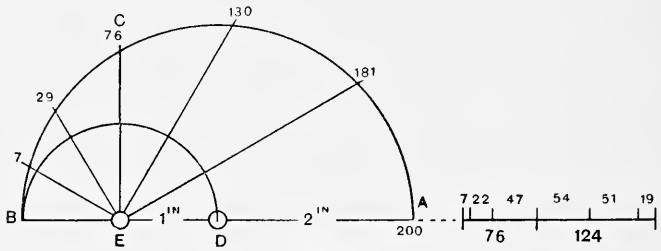

Fig. 77.

30° from the dead centre gives only 0·07 in. horizontal movement, whereas the centre 30° give 0·54 in. It is clear that not only would the bobbin be smaller at the top than at the bottom, but it would also be four times thicker at the top than in the middle. This is, of course, such a serious drawback as to make the eccentric quite useless for such a purpose as lifter motions, and as the crank and crank pin do not give much more uniform results, neither of them should ever be used to give a traverse of any description; for it was pointed out elsewhere that unequal speed of traverse conduces very seriously to the unequal wear and consequent nicking of roving and spinning rollers.

Spindle Driving.—For purposes of driving, spindles may be considered under two classes only.

1. Ring, Fly and Mule spindles, in which the relations of the band and whorle to the cylinder are always constant.

2. Cap spindles, in which yarn is guided on to different parts of the spool or bobbin by moving it, together with the tube and whorle on which it stands, up and down a fixed spindle, in such a way that the distance from the centre of the cylinder to the centre of the whorle is always altering.

All frames made more than twenty years ago, had the simplest possible arrangement for driving from the horizontal cylinder to the vertical spindles, no matter to which class they belonged. In every case a cotton band was tied as tightly as possible over both the cylinder and the whorle; on the half-cross principle. In the first of the two classes mentioned above, where the tension on a band of definite length always remains uniform, this system has the advantage of simplicity, and there is no more tendency for a band to slip when the lifter is halfway down, than there is when it is either at the top or the bottom of the stroke. When round driving bands are used to work on flat surfaces, or in grooves of much larger sweep than their own diameters, they have naturally less grip than a tape or flat belt under the same amount of tension. For this reason it is often necessary to stretch round bands very tightly into their places to ensure sufficient grip. When thus stretched, they pull the spindles or tubes with very great pressure against their bearing surfaces, causing much unnecessary friction, involving extra cost in power, as well as extra wear and tear.

In the second class, where the whorle is constantly moving up and down in a straight line, as shown in Fig. 78,

it is clear that its distance from the cylinder must vary very greatly, and that with this variation, the length and tension of the band must vary also. Theoretically, the axis of the cylinder ought always to be exactly the same height as the whorle when it is halfway up the traverse; but the difficulty of altering the position of the cylinder, and the frequent necessity for altering the height of the spindle rail, often gives them very different relative positions.

For example, if the cylinder is opposite to the whorle in its lowest position, **A** (Fig. 78), with a 36-in. frame and a 5-in. lift, the centre of the cylinder will be 18 in. from the whorle

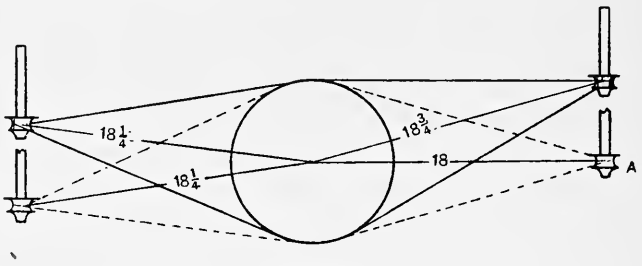

Fig. 78.

in that position. But when the lifter has reached its highest point, the distance will have altered to $18\frac{3}{4}$ in., so that there will be $\frac{3}{4}$ in. of stretch in half the length of a 48 in. band, or 3 per cent. extension and contraction at every rise and fall of the lifter. It is true that a new cotton band ought to possess quite sufficient elasticity to maintain a fair amount of friction under these circumstances, even when it was least extended; but when the same band gets old and saturated with oil, it becomes stiffened and extended to the length of the longest stretch, so that it has little friction on the whorle, when the cylinder and the whorle are nearest together.

In such a case, when the lifter is at the top and the band tight, the full calculation amount of twist will be put into the yarn; but as the lifter falls, the band will get steadily slacker, and the twist will become gradually softer, until the yarn may contain as little as 70 per cent. of the correct amount. This would naturally make a very irregular yarn, and in order to avoid all chance of its occurrence, tension pulleys and tapes have been substituted for simple bands, in almost all cap frames.

Tension pulleys work on a principle that is simple in the extreme. Whorles, instead of being grooved to take a round band, are made barrel shaped, so that the tape will run easily over them, as shown in Fig. 79. Each tape is arranged to run, not only round the cylinder, **C**, and one or more spindles, but also round the tension pulley, **J**, to which a constant weight is applied. Therefore, however long the distance between the cylinder and the whorle may be, the tension on the tape remains exactly the same.

The simplest way of applying tension, would be to arrange for each tape to drive two spindles, carrying it back towards the cylinder between the two, to a third and larger pulley in the same plane as the whorles; this third or tension pulley always being drawn towards the cylinder by weights or levers, with a definite force, equal, say, to 2 lbs.

If mechanical difficulties could be overcome, this would be a good system in one respect, because the tape would touch each whorle for fully half its circumference. As a matter of fact, such an arrangement would be unpractical, because for every 200 spindles in a frame, 100 extra pulleys would be required. They would be running at 2500 revolutions per minute, and it would naturally absorb a calculable

amount of additional power to drive them at any such speed.

The system on which tapes are now generally run, needs only one tension pulley to every four spindles; the axis of the pulley being almost parallel with that of the cylinder. This pulley is carried on a hanger, with a horizontal arm so arranged that a weight hung at its extremity will bring additional weight to bear on the tape, by tending to draw the tension pulley **J** away from the cylinder **C** (Fig. 79). See also Fig. 82 of a twist frame.

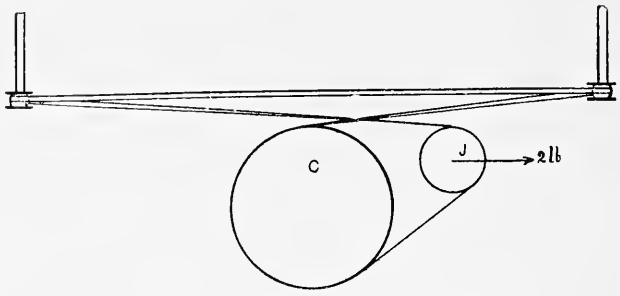

Fig. 79.

Under this arrangement, the tape only touches each whorle for a quarter of its circumference, but the wide surface of the tape is found to give so much friction that there is practically no slip with reasonable tension, and the system has the advantage of only requiring one 4-in. tension pulley to every four 1-in. whorles. The extra pulley therefore runs comparatively slowly and needs but little driving. If such a frame were driven by bands, some of them would be slack whilst some were very tight, with consequent unnecessary friction; but the tension pulleys maintain every tape under exactly the amount of strain that will keep the

spindles at full calculation speed, with the least possible expenditure of power.

Twist in spinning.—Under this head, the student will not unnaturally look for some treatise, which will enable him to estimate the requisite number of turns of twist per inch in various counts and types of yarn; but, on the other hand, all practical men are painfully aware of the futility of theorizing on a subject which is liable to such endless variations and exceptions. Two courses are open to any one desirous of writing a treatise on the subject. He might repeat any or many of the elaborate and complete mathematical formulæ, which have been worked out with great expenditure of care and time, but which are often useless, because they are based on axioms which are not common to all classes of single yarn. The second course would be to give tables (if they were procurable), to show the various twists adopted by different firms, for similar counts, at different speeds, from different qualities.

The first course would result in the formulation of some system, which every spinning manager knows would not bear the test of practice.

The second would only confuse the student, by showing that hardly any two firms use the same twist in the single, for their various equivalent counts.

It is pointed out elsewhere, that a soft weft yarn, spun on the same frame at two different speeds, would require two different twists. The drag which is caused in all throstle frames, by variations in spindle speed, is a constantly altering factor in the amount of twist required; and as different counts and qualities are spun at greatly varying spindle speeds, it follows that their number of

PARTICULARS OF CAP SPINNING FRAME FOR WEFT.

	For 60s botany.	For crossbreds.
Length and breadth over all	26 ft. $1\frac{1}{2}$ in., or 32 ft. 0 in. × 4 ft. or 5 ft.	26 ft. $1\frac{1}{2}$ in. × 4 ft. or 5 ft.
Spindles, number of	160 to 200	160
„ pitch of	$3\frac{1}{2}$ in.	$3\frac{1}{8}$ in.
„ speed of	6500 to 7000	6500
Bobbin, size of	$4\frac{1}{2}$ in. × $1\frac{1}{16}$ in. (spool)	$4\frac{1}{2}$ in. × $1\frac{1}{4}$ in. (spool)
„ „ barrel	$1\frac{5}{16}$ in.	$1\frac{5}{16}$ in.
Cap	$1\frac{1}{8}$ in. (bell shape)	$1\frac{3}{8}$ in. (bell shape)
Rollers, low front	4 in. or $2\frac{1}{2}$ in.	4 in.
„ front pressing (iron)	5 in. (covered double hard)	5 in. (cloth and leather laced)
„ low back	$1\frac{1}{4}$ in.	$1\frac{1}{4}$ in.
„ back pressing	$2\frac{5}{8}$ in.	$2\frac{5}{8}$ in.
Carriers, low	$\frac{3}{4}$ in., $\frac{7}{8}$ in., $\frac{7}{8}$ in.	$\frac{7}{8}$ in., $\frac{7}{8}$ in., $\frac{7}{8}$ in.
„ upper (tumblers)	„ „ „	$\frac{5}{4}$ in., $\frac{7}{8}$ in., $\frac{7}{8}$ in.
Draft (about)	6·6	6·6 or 7
Ends up	1	1
Lifter motion	Scaife's	Scaife's
Knocker-off	Spool (if any)	Spool (if any)
Front roller (output per revolution)	4 in. × $3\frac{1}{7}$ or 0·32 metres	——
Back roller (output per revolution)	$1\frac{1}{4}$ in. × $3\frac{1}{7}$ or 0·10 metres	——

Draft of back carrier on back roller $\dfrac{\frac{3}{4}\times22\times35\times7}{7\times18\times22\times1\frac{1}{4}} = 1\frac{1}{6}$.

Draft of front carrier on back roller $\dfrac{\frac{3}{4}\times22\times35\times7}{7\times15\times22\times1\frac{1}{4}} = 1\frac{2}{5}$.

Draft of front roller on back roller $\dfrac{4\times22\times84\times100\times7}{7\times44\times63\times22\times1\frac{1}{4}} = \dfrac{320}{33} = 9\frac{23}{33}$.

Draft of front roller on back roller by metres $\dfrac{0{\cdot}32\times84\times100}{44\times63\times0{\cdot}10} = \dfrac{320}{33} = 9\frac{23}{33}$.

Twist per inch $\dfrac{1\times10\times14\times215\times7}{1\times10\times40\times22\times4} = \dfrac{2107}{352} = 6$.

Twist per metre, decimetre, or centimetre $\dfrac{1\times10\times14\times215}{1\times10\times40\times0{\cdot}32} = \dfrac{301}{1{\cdot}28} = 235$ per metre, or 23 per decimetre.

Picks of lifter heart per minute $\dfrac{600\times6\times40\times1}{7\frac{1}{4}\times100\times60} = \dfrac{96}{29} = 3\frac{9}{29}$.

PARTICULARS OF FLYER SPINNING FRAME FOR WARP.

	For crossbreds.
Length and breadth over all	26 ft. $1\frac{1}{2}$ in., or 32 ft. × 5 ft.
Spindles, number of	160 to 200
,, pitch of	$3\frac{1}{2}$ in.
,, speed of	2300
Bobbin, size of	4 in. × $1\frac{5}{8}$ in.
,, ,, barrel	$1\frac{1}{4}$ in.
Flyer, size of	$1\frac{3}{8}$ in.
Rollers, low front	4 in.
,, front pressing	5 in. (covered soft, cloth and leather)
,, low back	$1\frac{1}{4}$ in.
,, back pressing	$2\frac{3}{8}$ in.
Carriers, low	$\frac{1}{16}$ in., $\frac{1}{16}$ in., $\frac{1}{16}$ in.
,, upper (tumblers)	$\frac{1}{16}$ in., $\frac{1}{16}$ in., $\frac{1}{16}$ in.
Draft (about)	6·6
Ends up	1
Lifter motion	Scaife's

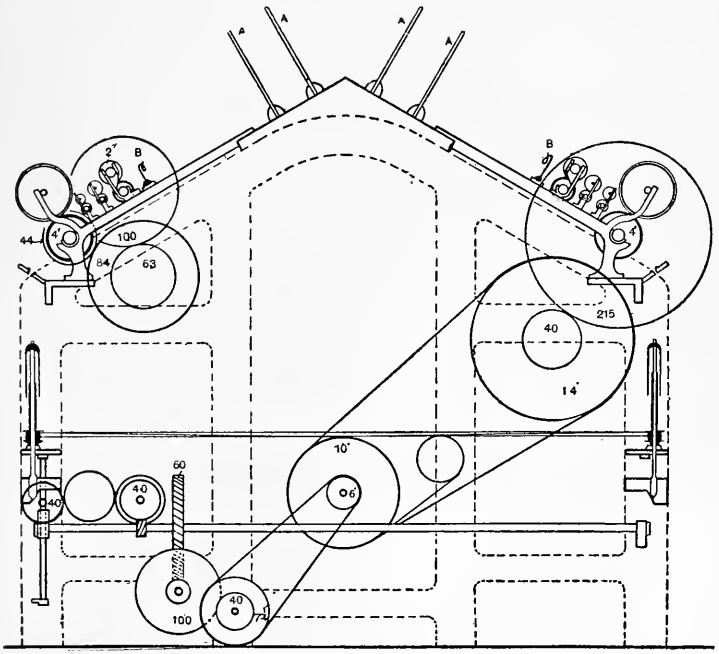

FIG. 80.—Cap spinning frame.

turns of twist per inch do not bear any constant relation to one another.

The length of the fibres in the material which is being spun, and the proportion of the long to the short fibres in that material, have also great bearing on the strength, and therefore on the amount of twist required in any yarn. This may be given as the reason why the twist in a hosiery yarn, made from short Buenos Ayres wool, does not bear any permanent relation to finer hosiery counts, spun on the same machine, from wool of different nationality and longer fibre.

The same argument applies to Cashmere and Italian weft yarns; and as different manufacturers are constantly asking for special twist for special purposes, in twofold as well as in single yarn, the whole subject would be out of place in a book, of which the leading idea is to propound working theories, based on practice, which shall have some bearing on the everyday work of practical men.

CHAPTER VIII

DRY SPUN YARNS

THERE are few questions exciting more general interest in the English worsted dress goods trade, than that which concerns the spinning of dry yarns, to compete with, and take the place of, French and Belgium mule or dry spun yarns, which, in some types of dress goods, give good results at very reasonable prices.

Few questions have ever been treated with less display of scientific method.

Few salesmen of the finer grades of worsted yarn can have escaped the oft repeated question, "Can you make dry spun yarn?" Every firm the sellers represent ought to be able to answer such a question in the affirmative, for dry spun yarns are spun, and can be spun, quite easily from any ordinary botany top, on ordinary worsted frames, to counts but little thicker than those to which the self-same tops would spin, if combed in oil.

To spin dry tops to counts of this description, without incurring undue waste and fly in all the processes, means that the tops themselves must be in perfect order.

Dry tops will always make more brush waste, and more fly, in going through the ordinary drawing, used for worsted yarns, than will tops combed in oil; but if the dry tops are

allowed to lie until they have picked up just sufficient moisture from the air, to put them (to the very centre of the ball) in standard trade condition, all decent tops will lose the harshness which we associate with dry-combed tops, and draw out smoothly without "whistling," without the fibres of the broken end forming a brush-like tassel, but lying as they should do, in a normal state, parallel, side by side.

Such tops will draw and spin with little difficulty, unless the weather is very frosty, but, so far as the writer knows, there is no possible artificial means of securing this much desired condition. With particularly hard fibred tops, the time of keeping may have to extend to many weeks.

Of course, if in the washing, every particle of nature is taken from the fibres of the top, it never will regain entirely the suppleness and softness that it ought to have; it will remain both dry and harsh to the feel.

If, on the other hand, all its exterior grease is thoroughly removed in washing, and that put on in carding is removed in backwashing, but if every atom that constitutes the actual substance of the fibre, as it appears when growing on the sheep, is left intact, by reason of judicious management in the washing processes; then, if no oil is added in or after combing, the yolk or suint will slowly work its way from within the fibre to the scales which form its outer coat, and thereby largely kill all tendency to electrify, when in the processes of drawing and of spinning, fibres are moved on one another and on iron.

The top itself is certain to feel harsh and rough, if handled as it comes straight from the comb, but nearly all the harshness passes off from good tops when well treated. A fortnight may be reckoned as the shortest time for which a dry-combed

top should lie, before it goes up to the drawing gill boxes. All tops go on improving for at least three weeks, and if the very best condition is desired, so that the waste produced in all the processes may reach a minimum, four, five, or seven weeks is not too much.

No dry-combed top, if washed with proper soap, will take the slightest harm if left in cool, dry cellaring for three or four months. How long improvement goes on it is not possible to say. The writer has seen tops which have been left to lie for many months which have completely lost all tendency to electrify when drawn; and they have so completely lost their harshness, that it was very difficult indeed to tell, by anything but smell, whether or not they were in oil or dry.

A top in such condition would go right through an ordinary worsted drawing without the slightest trouble, and would spin well to nearly the same counts that the same top would spin to, if combed in oil.

Unluckily, it does not follow even then, that yarn so spun would do the work that Belgian or French yarn would do.

The reasons are not simple, on the other hand, they are compounded from a long series of variations, which themselves differ in almost every yarn that is imported. To simplify the case, it will be best to make a list of all the various ways in which yarns can differ, and then endeavour to select the various causes that make a Bradford yarn less suitable than French or Belgian yarn for various types of dress goods.

1. For English worsted yarns, the fibres of the top should always be uniform in length, and every one as long as possible. French tops are often shorter, and are composed of fibres differing in length. Hence it can

often happen that for cashmere yarns, the Englishman is using Australian or else Cape wool, to make his yarn spin to the proper counts. The Frenchman or the Belgian, on the other hand, is using Buenos Ayres at lower price with greater filling power.

2. In the washing there is often serious difference as previously explained.
3. In combing there is greater difference still, for most French "dry-combed" tops are not dry-combed at all. They are first combed in oil, then backwashed, and then finished through two or more fine gill boxes. This makes it possible to take away less oil, and do away with all the various troubles inherent to the combing of a very short dry carding; the oil being removed from the top *after* it has left the comb.
4. Under the fourth head there is probably the greatest difference of all between English and French practices. In open drawing, *twist is inserted* in, at the very least, six processes, and in them all, there is no attempt to separate the various fibres as they are drafted by the rollers. In all "French drawing," on the other hand, there is *no twist* in any single process, and every box has porcupines in it. The draft is also generally greater on the Continent.
5. The rollers of the mule are less than half the size of those in English worsted drawing. The draft is always greater than in a throstle frame.
6. The method by which drag is put upon the yarn is wholly different in the mule from that in every kind of throstle frame.

7. Bobbins are used on frames; on them the yarn is wound. Cops, often without tubes, come from the mule, and there is naturally a difference in the drag caused in the loom by these two diverse methods.

Readers will doubtless notice that methods by which twist is introduced are not included, principally for the simple fact that theory, and what facts are to be had, do not agree.

It is a well-known fact, that if a length of yarn is held out straight and twist inserted; the twist will not be uniform in every inch of that yarn's length. No yarn is absolutely uniform in diameter. To get two different diameters of yarn equally hard, as regards twist alone, the one which is the greatest in diameter, requires a proportionately less number of turns of twist per inch. Strangely enough, the working of this law is automatic in its action. The thicker parts reach their proportionate degree of hardness before the thinner places which exist in every yarn, and therefore, as more twist is added, it runs past the thicker places, causes them to revolve, and passes into the thinner parts.

If, as is always said to be the case, mule yarn is leveller in twist than throstle spun, this law must be restricted in its action from some cause quite unknown. The proof is simple. In a mule yarn the twist is absolutely free to run from any part of a full stretch of 60 in. to any other part, and if there were, as there is sure to be, a place in the whole length which is considerably thinner than the rest, it will accumulate the full amount of twist it needs, from all the rest of the 60 in.

But in a throstle frame the length from the cap edge

or ring, up through the eye or guide, right to the nip is seldom 15 in., and therefore, there is only just about a quarter of the length for irregularities to draw upon. One would imagine that in a throstle yarn, each length of 15 in. must resemble every other length of 15 in. through its entire length.

At least in theory, then, the twist in mule yarn cannot be very much more even than that in throstle yarn, but as explained before (Chapter III.) it is quite possible that with equal sizes made from equal sorts, the mule yarn may be softer than all competitors, because the drag, caused by the cop, has no connection with the insertion of twist; in fact a cop may be built practically without drag. In throstle frames the spindle speed, diameter of cap, and many other things are bound to alter the drag.

From the seven headings given in the list, the luckless spinner is expected to find out what faults he is to avoid, by intuition. All he is told is, that the buyer wants a "dry-spun" yarn. Often enough he does not even know—

What it is to be used for.

How it is to be washed.

Whether to be made of B.A. or P.P.

Whether the wool should be short or long, regular or irregular in length.

Whether on cop or bobbin; what the best size of each.

Whether French drawn or open drawn.

Whether hard or soft, he is not told, and is not over-fond of trying to find out.

Until he knows the answer to each single head in the complicated array, he is assuredly bound to fail in substituting English for French yarn, at any price likely to come within the range of practical considerations.

Each point must now be studied with the utmost care so that its bearing for or against efficiency can be ascertained.

1. Under head 1, all questions bearing on the average length of various qualities must be considered. Of course no hard and fast line can be laid down, but it is always safe to say that Buenos Ayres wool is shorter and less regular in length than is Port Philip. We always take it as an axiom, that shorter wool will make inferior yarn. Of this no proof is given and is seldom attempted. The levelness of many cotton yarns, spun from fibres of equal sectional area and a third the length of 60^s botany wool refute the theory altogether. If 1½ in. cotton can be spun to 80^s worsted counts, why should not 2 in. wool do likewise? The quality and levelness of French and Belgian yarns made from such wools, make it seem possible. The simple fact is clear. They get machinery made to suit the trade; and we do not. We order our machinery of such dimensions as will suit all trades, that is to say, of such a size that it will do a long wool perfectly, but cannot possibly be set to be efficient for very short wool. With 1-in. rollers, cotton rather more than 1 in. long will stand a draft of 15 or 16, say full 12 times its length measured in inches. A 4 in. botany would usually get a draft of 6 or less, and short B.A., reckoned at 2 in. average of length, might possibly be drafted 3 or so. This, from existing instances, is clearly proved to be both waste of time and output. Both mean waste of money.

We make our drawing rollers such a size, that they will draw long wool as well as short, and because long wool laps are hard to take from off small rollers, we make them large enough. Not so our oversea competitors; they specialize and order rollers in their mules of such a size that they will nip short wool in such a way as makes full use of every millimetre of its length. If we would also order frames for every type of wool we wish to spin, and let them stand rather than put them on to work they were not built for, then we should be upon the way to stop the import, because we should be able to turn cheaper wool into fair yarn.

This is not empty theory, it is being done with great success in isolated instances here in Yorkshire.

2 and 3. Under these heads nothing need here be said, for every one acknowledges that if a top is spoiled in washing or in combing, the carelessness can never be remedied.

4. Head 4 is probably the most important of them all as regards filling power, in what we always know as mule-spun yarn. The prime essential principle of all French drawing lies in the separation of every fibre, for all its length, from its near neighbours, in every single process. This is the business of the porcupines. They do their work so well, that any one who sees a 2-dram roving made on both open and on French drawing, can hardly bring himself to believe that both weigh just the same amount per yard. When such is the acknowledged fact, it is no wonder that yarn spun from the two will differ in the finish that they take.

In worsted drawing, not only is there no attempt to separate the fibres, but, on the contrary, each process puts in twist which, in the usual practice of running all the

spindles of the various processes in one direction, is cumulative. In the first processes, the action is not noticeable; but in a finishing box, with four ends up and with a draft of six, there must be definite binding of various groups of fibres to one another.

Imagine for a moment that each of the four slivers going into the back rollers contains one turn per inch. Each will emerge from the front roller as a much smaller sliver, just $\frac{1}{6}$ the size, and with one-sixth the turns that it contained when it went in, that is, $\frac{1}{6}$ per inch.

Of course this is a slight exaggeration to make the point clear. The fact is this, that these four slivers, each of which contains this small amount of twist, are bound together by the rotation of the spindle, which adds another percentage of twist in the same direction to that they already contain.

With spindles running in the reverse direction in each succeeding process, the twist would not be wholly taken out, but those who know the kind of yarn a twist frame makes with spindles running in the same direction as a spinning frame, and in the opposite, will form no very incorrect idea of what would then go on. There is no need to press the argument, whichever way the spindles run, one thing is clear, the various fibres are bound together in every process in a set of cone or open drawing, instead of being separated from one another. For certain makes of cloth it is quite possible that this is desirable. In every kind of yarn destined to compete with dry or mule-spun French yarn, for hosiery or dress goods, every half turn of twist used in the drawing means so much filling power done away, in yarn spun from the roving thus prepared.

It is explained elsewhere how much twist costs the

maker. The speed of almost every box is limited by the speed at which the spindles can be run. The output of the box depends on the front roller, and therefore every extra turn of twist reduces output and increases cost. This is not all. As we have seen in every case where bulk is a desideratum in the yarn, it does distinct harm.

If English dry-spun yarns are to compete with those of continental nations spun on mules, the roving must be made to resemble that which is used by our competitors. But the very nature of our machinery makes twist an absolute essential, and if we really mean to attain the end in view we must begin to rearrange our ideas.

If drawing is to be conducted without twist, something akin to the French system must be adopted. The fibres in sliver or roving, made without twist, have very little cohesion. A sliver of that kind could never be expected to stand the drag which must be present with any kind of flyer. A ball built very lightly, with practically no drag, must be adopted, and for this purpose several peculiarities will be found in all French drawing.

In the first place, the creel is so constructed that balls from previous boxes can be unwound without the slightest drag or tendency to pull apart, or draft the fragile, twistless sliver.

The balling head itself is made to work with little or no drag, so that the ball is built up very soft, in order that the tender sliver may not be stretched at all. It is a very natural consequence, that balls must all be handled with the greatest care, for every box is just alike, producing twistless slivers rolled up, and built up into quite large balls, which have to be unwound with greatest care if they are to be

unwound at all. To this end special creels are always used. Each ball, built on a hollow barrel, stands upright, on a spindle that revolves on a fine point, supported in a little cup or pot. Friction in every case is at a minimum. In fact, the whole arrangement works extremely well.

Once in the rollers, as there is no twist, fibres move far more easily on one another. The work the rollers do is, therefore, easier, and porcupines—rollers with rows of pins, that act as combs to separate the fibres passing through them—are used instead of carriers to make the drafting regular for all the various lengths of fibre (see Chapter IV.). At first sight any one might easily suppose that porcupines might take the place of carriers in cone and open drawing. But fibres going through them must be parallel. When twist is present, things at once reach a deadlock. The twist with which the sliver passed the back roller, could not by any possibility get through the porcupine without some of the fibres being broken, knots would be formed as well. In fact, the two words, porcupine and twist, are incompatible.

The natural outcome of this reasoning is one that has been reached by isolated firms and found a great success. French drawing lends itself in many ways to treating shorter fibres, and in it, longer drafts are possible than is the case with the large rollers and the fast-running flyers of worsted drawing.

Long drafts, as is well known, mean cheap production, if other parts are set to coincide. There is no reason why French drawing should not be used with either cap or ring or flyer frames.

Just as French drawing differs from all other drawing in theory, because the slubbing and roving contains no twist; so

in practice the boxes differ from every other type in that they have nothing of the nature of a spindle. The drawing process usually begins with three processes of can gill boxes; from the last of which the sliver goes to the first drawing box; this box is typical of all the set that follow it, and strongly resembles a 4-head balling gill box. The sliver passes through two pair of dead-weighted back rollers, **AK**, **BL** (Fig. 81), between which there is little or no draft, before it reaches the porcupine **C**, a roller thickly covered with fine pins, which takes the place, and does the duty of fallers. From the porcupine, the sliver is drafted by the group of

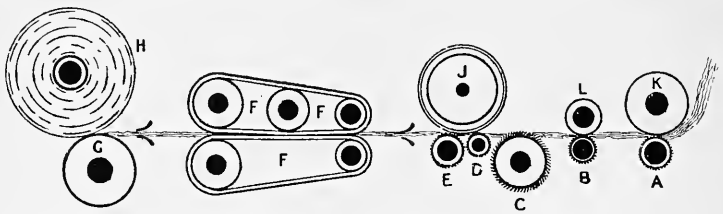

FIG. 81.—Low rollers **A, B, D, E** have milled flutes. All are less than $1\frac{1}{2}$" diam. Scale about $\frac{1}{8}$.

front rollers, **DEJ**, exactly as explained in Chapter IV., but after the front rollers a contrivance is employed which has no counter-part in other worsted processes.

The sliver as it comes from the front roller, is quite flat, and if any attempt were made to build it up into a ball, in such a condition, it is true that an excellent ball could be made, but if once wound, it would never unwind again, because the loose fibres at the edge of these flimsy slivers would become entangled, and the slivers themselves would tear rather than unwind. Between the front rollers **EJ**, and the balling head **GH**, a most ingenious arrangement of leathers is introduced. Each pair of leathers has a double movement.

Not only do they run continually forward at the same pace at which the roller surface and the sliver move, but they move sideways, going backwards and forwards for perhaps the distance of an inch, or rather more, some sixty times a minute (see **FFF**).

By this extraordinary complex movement, the sliver is rolled up until it almost looks as if it had a very little twist in it, though it has none at all, and all the time it keeps on moving slowly forward to the balling head.

The mechanism by which the curious leather motion is obtained is naturally very complicated, but it is capable of being strongly made, and works extremely well.

5. The lessons to be learned under this head are rather negative than positive. They point to no essential difference in the mechanical construction of the yarn spun on a mule, from yarn spun on a throstle frame, from similar rovings.

It has been pointed out in Chapter IV. in what the twisting of a mule-spun yarn differs from that of yarn spun on a cap or flyer.

The insertion of twist into mule-spun yarn causes one motion only—rotation on its own axis; there is no flying sideway through the air, as is the case when caps or rings are used, but in both cap and ring, as well as mules, the twist runs into the flat ribband of fibres combing through the front rollers, without the slightest difference of principle or practice, except that in the mule the twist runs absolutely up to the front nip, without resting in any way on the low roller. There is, therefore, not the slightest reason to look for structural difference in the two types of yarn, if both have been prepared on the same set of drawing. This, as most people know, is very seldom done.

Most mule yarn, therefore, has a structural difference from cap-spun yarn; but this is simply due to what took place before, not in the spinning, and is as well quite unconnected with different types or lengths of wool, or with the entire absence of oil, in many mule-spun yarns.

Why people very seldom draw a lesson from the small size of rollers used in mules is quite another matter. It is a very general belief that rollers should be as large as possible for worsted yarn. This is an argument of pure utility; it simply means that 4-in. rollers are most suitable for good long crossbred sorts, and that they also can be used to spin numerous other qualities of wool, not perfectly, but well. A $2\frac{1}{2}$-in. roller, on the other hand, will spin a $2\frac{1}{2}$-in. botany better than will a 4-in. roller, but as it is very nearly impossible to spin a crossbred sort on such small rollers, largely because laps have to be cut off if they get thick, all $2\frac{1}{2}$-in. rollers are discountenanced as not being sufficiently adaptable.

Few people would deny that smaller rollers should be used for shorter wool, and yet in practice Bradford stands where it stood in this respect quite thirty years ago. It is a simple axiom that for special trades special machinery must be made and used, but this need certainly not be read to mean that dry-spun yarn cannot be made on frames.

It has been pointed out, that small-sized rollers do not grip as well as larger ones, if both have equal pressure. Large sizes should not be adopted on this account alone, for other things than size may play their part in grip between two rollers.

The Yorkshire worsted trade seems to consider itself bound hand and foot to what are called scratch fluted rollers.

Mule rollers are not made in that way. Their flutes are far more frequent, deep, and regular, giving a grip on fairly soft top rollers, much more like that obtained with fluted drawing rollers. These should at least be tried for worsted frames.

No one can tell how much or how little alteration would evolve the most perfect frame for spinning quite short tops, or tops combed without oil, but it is probable that longer drafts would come in as a consequence. Drafting, as pointed out in Chapter IV., has nothing whatever to do with the insertion of twist, and therefore if a mule with 1-in. rollers can give a draft of 8 to any top of short B.A., it must be possible to make a frame to do quite as well, or better.

All that is wanted is that brains should be applied to every detail of the many processes through which a dry top goes from wool to yarn.

6. The question of the drag applied to build a cop or build a cop-shaped spool is treated so exhaustively in Chapter III. that nothing more needs to be said about the subject here, except one thing. The drag in a cap frame is altered in proportion to the distance from the surface on which the cop or spool is being built and the cap edge. If cops were to be spun on the bare tube on which the spool rotates, the drag would be so great as to require a great amount of twist to stand the strain. For this cause, extremely thick, soft, hosiery yarns cannot be spun with advantage on frames which have large caps, whilst on a mule, no matter what the size of cop, no matter whether it be built on bare spindle or on paper tube, the drag is not excessive. This is one of the very few points in which a mule stands without any comparison ahead of all throstle frames.

The sizes of flyers, caps, and rings are bound to affect the drag in their own way; presumably they will always do so more or less, but if a traveller can be found for use on all ring frames of such a nature that when the cop or spool is empty the traveller is nearer to the spindle than when the spool is full, it will be possible to do more theoretically perfect work on throstle ring frames.

7. The difference in the weaving qualities of cops and spools ought to be well considered by every weaver who is called upon to use dry yarns ; and when he knows the extent to which the properties of each affect the output of his looms, and affect the proportion of waste made, as compared with the total weight of weft actually made into cloth, the result should be communicated to the spinner, who then at least has the option of putting his yarn on to spools, parallel paper, or conical paper tubes.

It must not be expected from what has here been said that spinning dry-combed tops will always be as easy as dealing with a top of similar make and length, but combed in oil.

The first essential, that a dry-combed top should be mature in age and therefore in condition (using the word "condition" in its ordinary English sense), is not an easy one always to fulfil; at times it is impossible, and if the luckless spinner is driven from sheer force of circumstances to try and draw new dry-combed tops, or even tops which though they may be some days old, as yet are immature, he must expect results far from desirable. Put into other words, this means that though dry tops under favourable conditions can be treated without unreasonable waste and cost, on ordinary worsted machinery, there is no doubt that they can be treated

in a more satisfactory manner on machinery specially constructed for their treatment.

This machinery is French drawing.

In addition to its other numerous peculiarities and advantages it has this one besides: that for some reason, very difficult to understand, it makes less roller fly and brush waste from a given top, than will an ordinary worsted drawing, from the same top.

Probably it is because the construction of the French drawing gives more opportunity for the escape of electricity generated by the moving of the fibres on one another. It may be that the sharp points of the numerous porcupine pins act as conductors from which discharge can readily take place into the air.

This question of electrical action in wool spinning and drawing is far too little understood as yet, to make any theoretical statements worth reading; but, on the other hand, no one must forget that signs of electrical action are present whenever try tops are drafted between metal rollers, and any means that can be taken towards destroying or leading it away from the fibres or rollers, are of the utmost possible importance.

As yet, by far the most valuable known means of reducing electrical action in worsted processes is obtained by humidification of the atmosphere in which the process takes place.

It has been known ever since the discovery of frictional electric machines, that they worked best in a dry frosty atmosphere; and as wool fibres moving on themselves and on metal surfaces are known to be undesirably good electric generators their activity in this particular direction can be best

reduced, by placing machines which work them, in a warm, damp atmosphere. An atmosphere which is warmed and moistened by the blowing in of free steam is very effective in killing static electricity which makes fibres mutually repellant when they are similarly charged. Steam, however, is unpleasant to the workers, some people say unhealthy, and there are many efficient methods by which water can be pulverized or turned into spray so fine that it will never fall, but be absorbed by the atmosphere in the vicinity of the humidifier. Any of these methods may be used; the only desiderata being, that all the air in the room should be fresh, equally humid, and equally warm.

To obtain the desired degree of moisture some firms use one central station from which fresh, warm, moist air is distributed to various rooms and various parts of every room by large pipes. Some systems use high-pressure water to pulverize itself, and in the process to produce a local draught of air. In such an apparatus only the very finest water atoms are absorbed, the coarser spray is used to wash impurities out of the air that passes through them. All that which is absorbed diffuses evenly throughout the room, the heavier drops collected in the cylinder run back to a central filler where they first part with impurities, and then are pumped again to pulverizers.

One system which is very simple to erect, and has been made to give extreme humidity, consists of apparatus strongly resembling the ordinary spray diffuser used for scent. Its drawback is that it does not introduce fresh air in any quantity, nor does it cleanse the air already in the room.

In regard to all methods of humidifying, there is one

curious anomaly which is well worthy of the notice of those who propose to practise it.

Any room where any type of artificial moisture is employed, comes under the jurisdiction of cotton factory inspectors, and daily returns from every such room are required from worsted factories, showing the hygrometer reading. These have to be sent monthly to the head office.

CHAPTER IX

TWISTING

Twisting, as understood by all spinners, is a simple process comprising only the one operation of binding together two or more threads, by wrapping them round one another a certain number of times in every inch of their length; or, in more technical words, twisting two or more threads together, by putting into them so many turns per inch.

This process must never be confused with that which a weaver speaks of by the same term. When he orders a warp to be twisted, or, more correctly, "twisted in," he means that every separate end of some new warp is to be twisted in a peculiar way, which is almost as good as tying, to every other end of some other warp, which is running out of a loom or set of heralds, so that all the ends of the new warp can be drawn through the mails without the necessity for each of the several thousand ends to be separately threaded before they can be woven.

Theoretically and practically the process is comparatively simple, a twisting frame consisting of—

1. A series of pegs **A**, Fig. 82, on which the spinning bobbins stand, so that the single yarn may be wound from them with uniform tension.

2. A series of twizzle guides **B**, through which the

threads run, so that they may direct the yarn on to all parts of the leather-covered roller as the twizzles rise and fall.

3. Vertical leather-covered rollers **C**, so arranged that when the end is running, and the front twizzle is down, they are "in gear" driven by worms and wheels or by some other positive motion, so that no amount of friction will stop them;

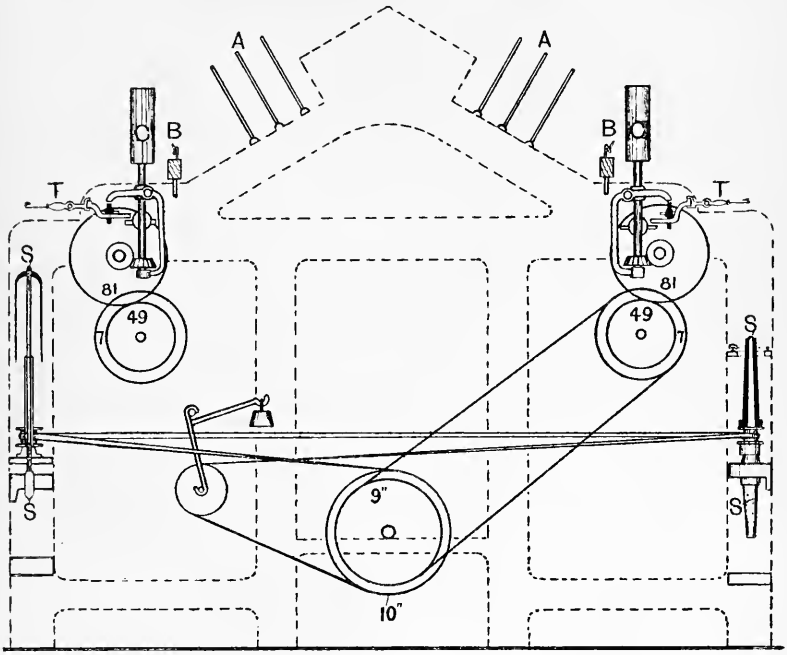

Fig. 82.—Cap-trap twist frame.

but so arranged that they will fall out of gear and stop as soon as one end breaks. Old-fashioned devices, where the rollers are driven by friction of bands or leather faces, should be treated with the utmost suspicion, because they are always liable to slip and to cause hard or soft twist.

Some frames, especially for three- or four-fold yarns, are made with a horizontal roller, similar to that of a spinning

frame, but they carry on this roller two upper rollers, which are supported in such a way that when an end breaks, and the trapper rises, the stands which carry them fall forward, away from the low roller, so that no friction with it remains, and they come to a standstill (see Figs. 86 and 87).

4. The trapper, **T**, is a guide placed exactly over the spindle, to form a centre from which the thread can swing freely round the cap or ring, and so arranged that if the strain on the yarn is removed, from any reason, the trapper will rise and stop the roller.

5. The spindles **S**, either cap, ring, or flyer, are on exactly the same principles as those described for spinning, but they are larger dimensions in order that bobbins of larger size, to hold as much as four ounces, may be used, and run at high speeds.

No. 1. The pegs **A**, from which the yarn runs, are quite simple, often of unturned iron placed nearly vertical, and of such diameter that the bobbins can easily run round on the conical washers at their bases. For the very large majority of counts and qualities, this arrangement is amply good enough, but there are exceptional qualities for which this system will not do at all.

Hosiery qualities and other very soft yarns sometimes contain so little twist that they cannot drag the bobbins round, in spite of the very slight friction of the pegs, and one or two courses must be adopted. Either a sleeve, such as that described on p. 169 in the chapter on Spinning, must be employed, so that the bobbin may rotate without friction; or a rod must be run along the whole length of the frame, exactly over the pegs, and the yarn must be carried from the spools over this rod, so that it may slip over the noses of the

bobbins without making them rotate. The former is the more costly but the better plan, because there is very little likelihood of the yarn running off too fast, whereas if new yarn is run over the bobbin nose, it is always apt to come off too fast and to curl up into snarls, which are certain to make bad places in the piece. On the other hand,

Very hard twisted yarns may require more drag than can be obtained with pegs and cones, because in crepon and other hard twisted kinds of yarns, the ends will run into snarls, unless they are kept under definite tension, and cases arise in which some method of washer drag must be adapted to the bobbins, so that there can never be any slack yarn between them and the rollers.

No. 2. The absence of pressing rollers makes the wear and tear of the leather covering of the vertical rollers very slight. Nicking is therefore impossible, and the regular traversing of the end is of much less importance than in spinning, because very little damage can result if the traverse motion gets out of gear; but in this, as in all other cases, some traverse motion which gives an equal speed at all points should be used.

No. 3. **Twist-frame rollers.**—The use of vertical instead of horizontal rollers makes it necessary to have a separate roller for each spindle, and because every roller must stop and start independently of the others, each of them must be driven separately in such a way that all will move at exactly the same speed all the time the trappers are down and the rollers are revolving.

It is probable that the first machine twisting was done on spinning frames, using only the front rollers; but it was soon found that a great deal of unnecessary waste was made whenever an end broke down, because there was no automatic

motion to stop the roller running; in fact, it was impossible to stop the rollers at all, either to save waste or to tie a broken end, and for that reason all kinds of expedients had to be adopted in practice which tended to inferior work and bad knots. It was soon discovered that it would pay well to have special machinery, in which each roller and spindle could be stopped at pleasure. In the very earliest type of twisting frame there was no special shaft to drive the upright rollers, but each was driven by a band from a slow moving cylinder, placed above the cylinder which drives the spindles. Each roller carried one or more pegs, and when an end broke down the inner end of the trapper fell against one of the pegs and so prevented the roller from rotating.

In a second type of twist-frame trap rollers, a shaft was carried along each side, directly under the row of rollers, and the shaft of each roller was driven by a little pair of bevel wheels **B B** all the time the frame was running (see Fig. 83). The roller itself **R** carried pegs **P**, as in the first type, but **R** was loose on the shaft, and had a square bottom **F** which rested on the broad flange or washer **W**, which was fastened to the upright shaft. Naturally the friction between the flange and the heavy iron roller drove the latter round until the pegs were stopped by the trapper **T**, on the breaking of an end. When the roller stopped there was naturally a great waste of power in friction, between the two surfaces of the rotating washer **W** and the stationary friction plate **F**.

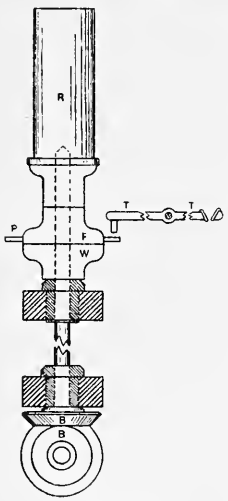

Fig. 83.

Both these systems have two serious drawbacks. In the first type the bands may get slack, so that the rollers will revolve at less than full speed; and in the second the washers may get greasy, with the same result. This will, of course, cause soft and irregular twist. The most serious drawback to both these types is the great increase of power needed to drive such a frame when the rollers are standing. Their method of construction made it necessary that the fewer spindles there were running, the greater is the amount of friction going on, with proportionately greater cost of driving the frame; whereas things ought to be exactly the other way round. Stopping rollers ought to save power, and the most modern, positively driven rollers are all designed with this end in view.

The trapper and the upright roller are so intimately connected, that it is almost impossible to describe them apart, but when the roller is revolving it ought to have nothing whatever to do with the mechanism which stops it, although, for the sake of calculation, it should be considered as a portion of the machine in positive connection with the rest of the frame, by means of screw and wheel gearing.

Positively Driven Rollers.—There are several different types of rollers which fall quite out of gear when the trappers are not down, and the two which are here described may be taken as typical, because no amount of friction can stop the rollers when they are in gear; yet when they are not running, the whole mechanism is so completely separated from its driving gear, that less power is needed to drive the frame with the rollers standing than when they are running. This is a great contrast to the old friction-driven roller.

Compared with the simplicity of the old type of roller,

all the modern ones appear complex. They are, however, much simpler in work than a description would indicate. In Fig. 84 the trapper consists of a lever **T** in two parts, hinged at **A**, and so balanced that when no end is running, the twizzle rises and the inner end falls. This inner end is also hinged, so that the portion nearest to the roller can swing sideways when it falls against the rotating peg **D** in the upright roller shaft. When it is thus pushed to one side, it moves the hinged

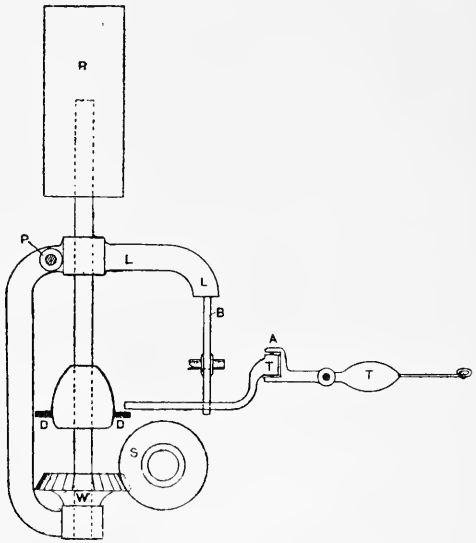

FIG. 84.

support **B** from under the bent lever **L**, and the whole roller, with its frame and wheel, then swing on the pivot **P**, because the centre of gravity of the roller is forward of this support, and whilst the roller **R** comes half an inch forward, the lower part of the hanger and the wheel **W** swing backwards, clear of the screw-worm **S**, which drives it when in gear.

The small movable parts of this motion are so cleverly arranged that all of them resume their proper positions

automatically, directly the trapper goes down, and the roller is once more in an upright position.

To show how possible it is to attain a similar end by two entirely different mechanical devices, the reader cannot do better than examine the motion shown in Fig. 85. In its simplicity, and in many of its arrangements, it resembles the old-fashioned type of roller, driven as it is by a simple pair of

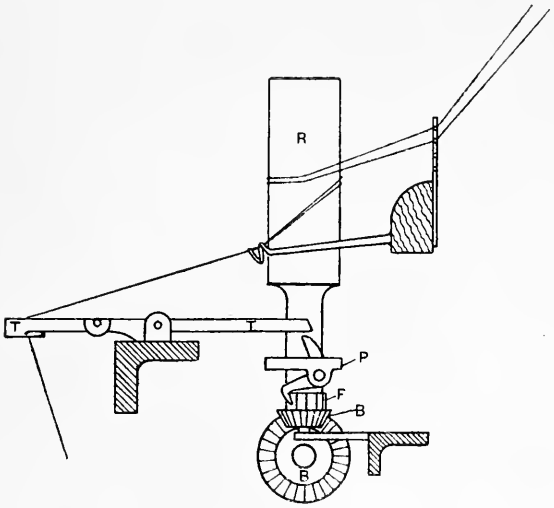

Fig. 85.

bevel wheels (**B B**). In Fig. 85 the bearings are not shown, but an upright shaft runs up to the roller **R**, as in Fig. 83. Here the resemblance ends, for, instead of the broad surface of the friction plate, the only frictional contact between the roller **R** and the bevel wheel **B** is that against the small collar below the trigger-plate **P**. The friction between these two portions is too small to cause the roller to revolve against the slightest drag, but when the trapper-end is up, a positive

drive is obtained through the trigger which falls into the ratchet wheel **F**.

This bell-crank shaped trigger is pivoted on the plate **P**, in such a way that when the inner end of the trapper falls, the rotation of the roller and the plate bring the upper end of the trigger against the trapper, forcing the trigger back, and thereby lifting its catch-end out of the teeth of the ratchet wheel.

These two modern motions, when compared, offer so many points of contrast that they form an excellent illustration of the possibility of great structural diversity in similar machines.

If the various adjustments are automatic in any type of trap motion, its efficiency may be judged by noting—

1. The efficiency of the positive method by which the roller is caused to rotate.

2. The amount of friction removed from the total needed to drive the frame, on the stoppage of each separate roller on the breaking of an end.

3. By the simplicity or otherwise of the trap motion and its parts.

4. By the rapidity with which the roller stops on the breakage of an end.

Three- and Four-fold Twisters.—Before going further into the question of folding, it is essential that the reader should understand why a twofold end invariably breaks down, if one of its strands gives way or runs out, whereas it does not follow that a trapper will rise, or the end cease running on to the bobbin, even if three ends out of a five-fold yarn should give way.

Except for a few very special purposes, yarn is invariably

twisted in the reverse direction to that in which it is spun. When two ends are thus being twisted together, their relation to one another prevents the escape of the twist put in, in the spinning process; but as soon as one of them is removed, the twist-frame simply takes out the twist of the remaining single thread, and the moment all the twist is gone, the drag which is caused by the size of the cap, pulls the fibres apart.

In three or more folds yarn things are entirely different. So long as there are two threads left to run together on to the bobbin, the reversed twist binds them together, and makes them stronger than they were as two separate single threads. Unless the trapper is very delicately balanced, the loss of the weight of one or two strands will not cause the trapper to rise, and the frame will continue to turn out three-, instead of five-fold yarn, until the absence of the broken ends is detected by the operative.

For this reason frames for trapping three or more fold yarn must be made on an entirely different principle, with detectors behind the rollers, so arranged that the breakage of one end in any group will allow a detector to fall and stop the roller. This alteration introduces a whole series of causes and effects which have altered the nature of the frame. The reasons for only a few of the more obvious changes should be carefully noted.

1. Failure of a front trapper to rise on the breakage of one strand of a three- or four-fold yarn makes trapping behind the rollers absolutely necessary.

2. Trapping behind the rollers makes it possible to tie all knots in the single strands behind the roller, instead of breaking down all the ends at once, and tying bunch knots, as in ordinary two-fold work. Every one knows that four

small single knots in a four-fold yarn will cause infinitely less damage in a piece, than one bunch knot of the same yarn in the same piece.

3. But if the rollers should stop automatically until a knot is tied, whilst the spindle continued running, the yarn

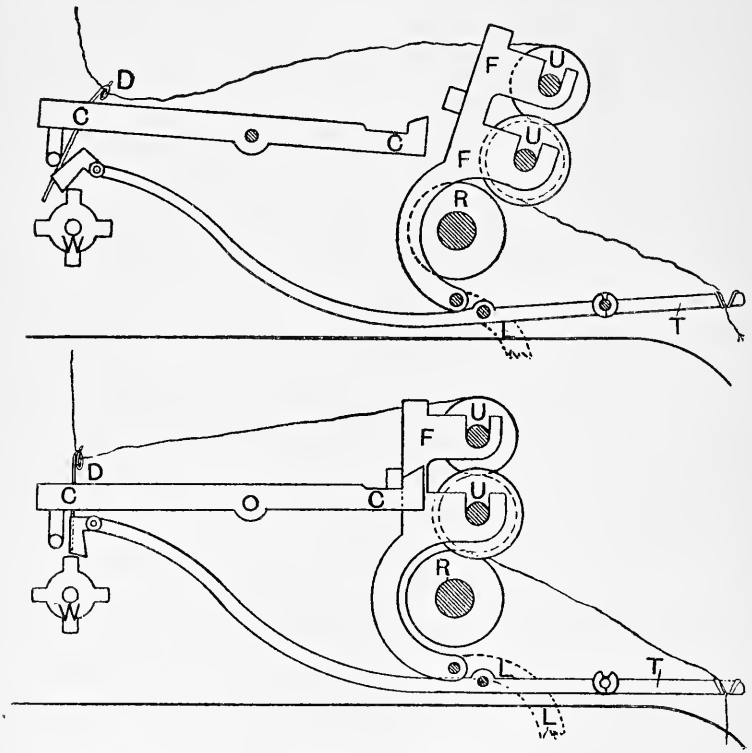

Figs. 86 and 87.

between the spindle and the roller would be twisted far too hard, before the new end was tied in, and therefore—

4. The spindle must be stopped automatically, or else faulty yarn will go forward.

5. But if anything of the nature of a brake were used to

stop the spindles, all the bands would be rubbing over the standing whorles whenever the frame was running with only a few spindles in work, and this would create a terrible amount of friction and a waste of power in proportion to the number of spindles standing.

6. To save this waste of power, and the terrible wear and tear on the bands and whorles, it is found necessary to "throw off" the bands whenever a spindle stopped; and in the type illustrated in Figs. 86 and 87, the cylinder shaft, the low front roller, and the lifter are practically the only things which are running in a four-fold trap twister, which has no yarn in it.

A type of roller often adopted for this purpose is exactly like the low roller in a spinning frame, but instead of having leather-covered upper rollers pressed tightly against it, each boss on the low roller **R** supports two iron rollers **U**, round which the yarn travels and by which it is held. So long as all the threads are perfect, this position is maintained, but directly one end breaks, behind the roller, a detector **D** drops into such a position that it is caught by a wiper **W**, which loosens a catch **C**, .d allows the roller-frame **F** to fall forward until both the upper rollers are out of contact with the lower one, **R** (Fig. 86). In this position they can only be stationary, because there is nothing to drive them, so the yarn is no longer paid out. At the same moment that they come to rest, a lever **L**, attached to the lower end of the roller frame, moves the driving band from the fast to the stationary pulley on the cylinder, and stops the spindle as well.

In this type of frame, just as in a two-fold twister, the trapper rises, if the yarn breaks between the rollers and the

bobbin; but its action is different. When the front end of the trapper rises, the hinged portion of its inner end falls upon the wings of the rotating wiper **W**, and is thereby lifted in such a way that it disengages the catch, and lets the upper rollers **U** fall forward out of contact with the low roller **R**, in exactly the same way as would be the case if a single thread had broken behind the rollers, and allowed a detector to drop. The rollers then stop at once, and they also stop paying out yarn or making waste.

The whole thing takes place so instantaneously that it is difficult to believe that so many parts are involved; and when the frame is running at a normal speed, it stops so quickly after an end has run from one of the bobbins, that sufficient length of thread is left behind the roller to tie a new end to it.

Spindle Brakes.—In ordinary two-fold twisters with vertical rollers, we have already seen that if one end runs out, the other is absolutely certain to break down, and therefore there is much less need for automatic stopping of the spindle, because no waste is going on, and the girl can easily stop the spindle by hand to pick up the thread prior to tying in a new pair of ends. If the spindle could be allowed to run again directly the end had been put through the eye of the trapper, there would be no need for anything to assist the fingers in stopping the spindle; but if the spindle is allowed to run whilst the knot is being tied, before the roller begins to deliver yarn again, it is clear that all the yarn between the roller and the spindle would receive too much twist. For instance, if the spindles were running 6000 revolutions, and the whole operation of tying a knot took only 10 seconds, the 20 in. or less of yarn between the spindle and the roller

would receive 1000 turns, or 50 turns per inch too much twist. This would, of course, ruin any yarn, and all spindles must therefore be stopped whilst a knot is tied.

Only a few years ago it was the general practice to make twist-frame tubes with a large flange nearly 3 in. in diameter, so that the edge of the flange projected beyond the bobbin head, and was in a position convenient for the operative to press her knee against it, whenever she desired to have the spindle standing. Unfortunately the continual rise and fall of the lifter made the pressure so irregular, that the spindle would often revolve slowly for at least part of the time

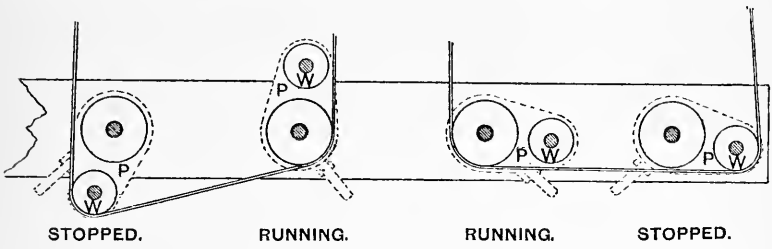

FIG. 88.

during which it ought to have been stationary, and as a consequence, pieces of hard twisted yarn often occurred in the neighbourhood of knots.

Hand-brakes of many kinds were tried by various users to remedy this defect with varying success; some of them being complicated and patented, whilst others were very simple and only used by their designers.

The first really efficient mechanism for this purpose was known as Garnett's, and practically its only drawback was its cost, for it is one of the very few brakes which reduce the friction when the spindle is standing (see Fig. 88). It is especially suitable for spindles driven with tapes and tension

pulleys. Near to each spindle a whorle, **W**, stands, free to rotate with little or no friction on a pin which is held vertical in a plate **P**, also centred on or near the spindle centre. When the spindle is running, the whorle is behind the spindle or within the tape (see Fig. 88), but as soon as it moves forward by a small handle on the plate, it carries the tape clear of the spindle whorle and at the same time presses a pad, not shown in the figure, against the tube to stop its rotation. As the whorle is light and easily driven, it absorbs less power than the spindle, and can easily be applied to almost any type of frame, but unfortunately few people thought it worth while

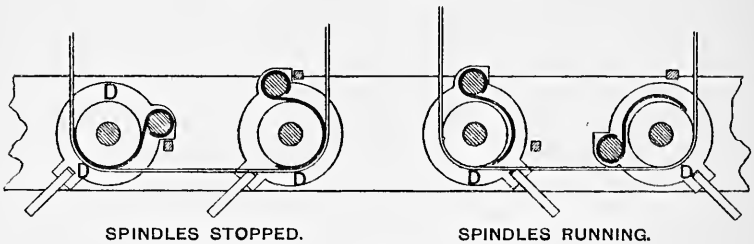

Fig. 89.

to pay the price necessary for a device which required such careful workmanship, and consequently it never came into general use.

A patent of a simpler, but very similar kind is now made by Prince Smith & Son (see Fig. 89). It can be slipped over the spindle like a washer, and when it is in place, with the spindle running, a curved piece of metal takes the place of the whorle in Garnett's patent, and slips in between the tape and the spindle whorle on the movement of the trigger on the disc **D**. The curved plate is so hinged that the tape presses it like a brake against the whorle, which is instantly

stopped; the plate absorbing the whole of the friction of the tape. Its one drawback is extra wear and tear on the tape, and increased absorption of power when spindles are standing; but as spindles are very seldom kept standing in frames of the type for which it is designed, the objection is more theoretical than real.

Probably the best brake for general purposes is one hinged in front of the spindle rail, or lifter rail, in such a way that the operative can hold it to one side with her knee. Each lever **KL** controls two spindles, hanging idly between them when at rest, and so pivoted, that when pressed to the right it stops the spindle on its left and *vice versâ* (see Fig. 90). It is less effective than the last-named type because the moment pressure is relaxed the spindle will begin to rotate, but it will do very effective work, and the position of the lever, or knee plate, makes it very easy for the operative to use, especially in ring or fly frames where the whorles and brakes are always stationary.

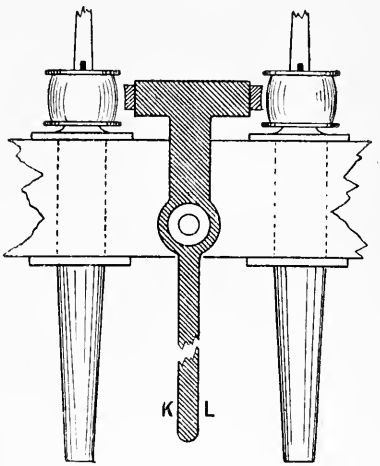

FIG. 90.

For spindles and their theories, see Chapter III.

For methods of spindle drive, see the end of previous chapter.

CHAPTER X

WINDING, REELING, AND WARPING

ALTHOUGH the structure of a yarn is completed in the twisting process, it often happens that it is there put on to bobbins which are not suitable to be sent from one factory to another ; and processes are therefore introduced after twisting, to put the yarn into such a form that—

1. It can be packed into small space with little cost.
2. There is as little superfluous tare as possible.
3. In a form from which the weaver can use it with the least possible expense.

Yarns may be delivered in nine different forms.

1. Fine single yarn is usually put on to spools, or single-headed bobbins measuring $1\frac{1}{8} \times 4\frac{3}{4}$ in., whilst thicker counts are put on to similar spools of larger size (see Appendix C.).

2. Paper tubes are used for the same classes of yarn, which are likely to go abroad, or to any place to which carriage is expensive.

3. Twofold yarns may likewise be twisted direct on to large spools.

4. Or on to paper tubes.

5. Yarn for export, or for dyeing, is usually twisted on to large double-headed bobbins, and reeled from them on to swifts $1\frac{1}{2}$ or 2 yds. circumference, into hanks of 560 yds.

These hanks are packed into tight bundles, usually weighing 10 lb. each.

6. Warp yarn is also delivered on large bobbins 5 × 4½ in., to firms who make their own warps; but as these large and heavy bobbins break very easily, it is now more usual to deliver yarn for this purpose on—

7. Cheeses, or barrels, which are really balls of yarn, often 5 in. long by 4 in. or more in diameter, weighing about 1 lb. They are built in such a way that they will not fall to pieces, and they are very much used for export, because the paper tubes on which they are wound, form so small a percentage of the total weight, that they add practically nothing to the price per pound of yarn or to the cost of carriage.

8. All those who have any knowledge of weaving will be aware that it is necessary to have a large number of threads arranged side by side to form the warp, into which the weft is to be interlaced. Through force of circumstances it has come about that this process of arranging the threads side by side is regarded as the duty of the spinner. Such a series of threads form one warp and may contain, let us say, 2800 ends, each 250 yds. long. This would make five pieces of cloth, each requiring 50 yds. of warp, and if the counts are $^{2}/_{50^{s}}$ such a warp would weigh 50 lb.

This number of threads may be delivered either in a large ball or on a beam. In the first case they would be wound in groups of 200 at a time on to a swift or mill 15 yds. in diameter, from which they would again be wound, into a ball, when the full number of ends was complete.

9. They might be beamed at one operation, by means of any of the various types of warping mills which are now in

use, and this would save the cost of beaming and dressing to the weaver. This process is therefore of mutual advantage to the weaver and the spinner, because the latter can put the warp on to beam, with modern machinery, quite as cheaply as he can make it into balls, under the old-fashioned plan.

As none of these nine processes involves any alteration in the relation of the fibres within a thread, either as to lateral position or to twist, very few principles are involved in any of them, and there is comparatively little opportunity for causing damage. They may, therefore, be dismissed with briefer notice than would otherwise be necessary.

Under heads 1, 2, 3, and 4 no further descriptions are necessary, because the winding on to spools, tubes, or cops takes place on the spinning and twisting frames respectively.

No. 5. **Reeling.**—Both single and twofold yarns are very often delivered in hanks. Single yarns are generally made into hanks of 1 yd. circumference, whilst twofold yarns may be used equally well from either 1½ or 2 yds. hanks. For ease of calculation, the hanks are nearly always reeled to a length of 560 yds., which is the standard unit of length, on which all English counts are based. When a spinner accepts an order in hank, he is responsible for delivering correct length as well as correct weight in every hank, and means must therefore be adopted, to insure that successive wraps of yarn are spread uniformly over the surface of the reel and not heaped up into ridges, of which the outer layers would be longer than the inner. For this purpose it is necessary that the yarn should traverse across the face of the reel, and two entirely different methods have been adopted for this purpose. Clearly the narrower the hank can

be wound on the swift, the more threads will each machine wind at one time, and the more weight will it turn out. Therefore the pitch of the frame is usually not more than 4 in. If the hanks were allowed to touch one another on the reel they would get inextricably entangled, and therefore a space must always be left between them; this limits the traverse to about 3 in., and the pitch of the frame to about $3\frac{1}{2}$ in.

Lea Reeling.—The usual method of dividing each hank into leas, seems to be a curious relic of hand-winding days, when the only method of obtaining a traverse was to lift the thread from one guide to another. In modern reels the process is, of course, automatic, and though it would be easier to make a slow and steady traverse motion, the intermittent one is preferred, because in tying up the loose threads of the hank it is customary to interlace the lease band, so that each lea of 80 yds. is separated from its neighbours. The whole hank is therefore much less likely to get entangled in the process of dyeing. In the worsted trade this method was at one time almost universal, but some years ago cross reeling became much more general.

Cross Reeling.—In cross-reeled hanks the guide is made to traverse quickly to and fro, making about one traverse for every three-quarter revolution of the reel, so that each successive thread of yarn must cross the one laid on before it. No two threads lie parallel, and there is less fear of their getting entangled. The traverse motion is so simple that it does not receive the attention it deserves. The speed at various parts is certainly not very important, but this is not a very good excuse for the frequent use of eccentrics for the purpose; and the extra thickness of the edges of a hank, as it lies on the

reel, is a clear proof of the statement made when dealing with other traverse motions (see Chapter VIII.).

In this process as in almost every other, cost is regulated directly by output or speed; and as the speed at which a reel can be run depends solely on the speed at which the yarn can be unwound from the bobbins, the spindles on which the bobbins stand are one of the most important parts of the machine. The one object of all spindles from which bobbins are unwound, should be to keep a gentle and uniform tension on the yarn as it leaves them; for if at any time the tension should vary for any reason, the speed of the bobbins will become irregular, so that at times they will overrun the swift, turning out more yarn than is wanted, and then stopping or moving at a very much reduced speed. As they slacken down, or stop, the swift overtakes them, and they then have to start again with a violent jerk which strains the yarn much more than a considerable tension, steadily applied.

Probably the best way to obtain steadiness is to use some well-made spindle revolving smoothly in bearings so shaped that the bobbin will have sufficient friction on it to cause both bobbin and spindle to rotate together. Means could then easily be adopted, to apply the right amount of tension, but when stationary pegs are used, conical steel washers with cloth washers on the top of them may possibly give satisfaction.

Most reels are so constructed that when 560 yds., or other desired length, has been reeled, the machine will stop automatically, or will ring a bell so that the reeler may stop it. The swift will now be covered by a certain number of hanks, all containing the desired length, very tightly stretched over its arms. The reeler's first duty is to tie both the

loose ends of every hank to a lease band, which may separate every lea in a straight-wound hank, or simply encircle the hank at any one place, if it be cross-wound. This leasing makes it easy for the user to find the right end to unwind, when the time comes to wind the yarn on to bobbins for use, and if the lease band is of a different colour or material to the material of the hank, it will always be easier to see and to remove.

It now only remains to take the yarn from the reel, and the first movement necessary is to slacken the tension by one of several methods. The oldest reels had one wing hinged so

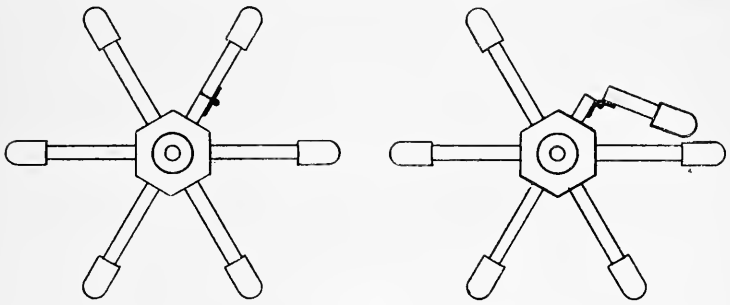

Fig. 91.

that it could be collapsed (see Fig. 91), reducing the total circumference of a 54-in. reel to about 50 in., and making it easy to slide the yarn along to the end from which it could be taken off. In more modern reels, all the wings collapse together, still further reducing the size (see Fig. 92), and there are other more complicated ways of attaining the same end.

There have also been many patents for taking the hanks from the spindles without touching the shaft by hand, but in one of the most recent types of machine a simple method has been evolved by which the hanks can be removed in a way

which strongly resembles the old-fashioned method, but without any need for the reeler to lift the shaft from the bearing as in the old-fashioned type.

As many hanks as will weigh four ounces are next twisted up together, in a way too well known to need description, and forty of these are then put into a press and tied, under pressure, into a 10-lb. bundle which only measures 8 × 10 × 12 in. or less.

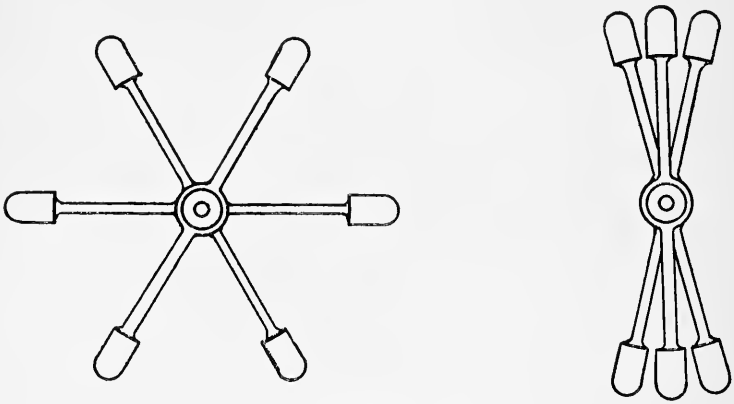

Fig. 92.

Winding.—Yarn which is wanted for warping is often wound from twist bobbins on to warping bobbins of 5 in. traverse by about 4 in. diameter. Five, six, or seven twist bobbins are put on to one warping bobbin, each being carefully knotted to the one before it, so that when they are in the warping creel, the bobbins will run for a long time without coming out. By this means the time of the warper is economized, and the warping mill can turn out more and better work.

Old-fashioned winding frames consisted of two long rows of upright spindles, one of them driven at a uniform speed,

the other free to rotate; the driven spindles carried warping bobbins on to which the yarn was to be wound, whilst twist bobbins stood on the other row, free to rotate. The speed of such a frame is limited only by the speed at which the bobbins can revolve steadily, because the drag increases as they increase in speed. Let us say that 2000 revolutions per minute will be satisfactory. The difficulty is that the take up of the warp bobbins is very variable, and if they run 2000 revolutions when they are empty and the twist bobbins are 2 in. in diameter, the latter will only be revolving 1000 revolutions; but when all the yarn is transferred to the warp bobbin, it will be 2 in. in diameter and the twist bobbin only 1 in., and the latter will therefore be going at 4000 revolutions per minute. When a new bobbin is tied in, the twist bobbin and the warping bobbin will both be one size and the speed of both will be 2000 revolutions; but before this second twist bobbin is empty it will be about two-fifths of the diameter of the warping bobbin and will be revolving 5000 revolutions per minute; and lastly, when the warp bobbin is full and the last twist bobbin is empty, their diameters will be as four to one, and the speed of the twist bobbin 8000 revolutions.

It will be safe to say that the strains on the yarn are not in exact proportion to the speeds, but it is pretty certain that if the strain at 2000 revolutions is as much as the yarn will stand, there would be at least four times too much tension when a speed of 8000 is reached. If, on the other hand, we set the frame so that 2000 is the speed of the twist bobbin when the warp bobbin is full, the frame will only do full work for a very short part of each doffing; the output would be less than half the full amount for a large part of the time, and at the beginning, the yarn would be travelling at less than

one-fourth the proper speed, so that the total output of the frame would be a long way under the real maximum.

These figures are insisted on, not because of the importance of the machine they illustrate, but because the same principle is in force more or less whenever bobbins of any kind are unwound at high speeds.

Drum Winding.—Nowadays, warping bobbins are almost invariably wound on a drum-winder, so that the amount of yarn moved per minute is always exactly the same, and the only alteration of drag will be caused by the acceleration of the bobbin from which the yarn is being wound. As the bobbin empties, the drag will also increase slightly, because, although the weight of the yarn diminishes in proportion to its diameter, the weight of the bobbin itself remains constant, and has to be moved at an ever-accelerating speed as the yarn decreases in diameter.

The machine so strongly resembles the one shown in section on Fig. 94, as to need no description, but for reasons explained in Chapter VIII., the traverse motion must have a constant speed, if the layers of yarn on the bobbins are all to be parallel to the barrel.

If the foregoing reasons have conveyed the desired meaning to the reader, he will understand that the strain on the yarn which is being wound from any bobbin or ball, can only be kept uniform if every alteration of its diameter is accompanied by corresponding alteration in weight.

Cross Winding.—This, of course, can never happen if bobbins are used, but the substitution of balls wound without side supports really solved the problem, for they may be better described as bobbins without ends. The tubes on to which the yarn is wound are so light that their weight has no

calculable effect on the yarn, and the drag in winding from them, will always be constant, unless it should happen that their reduced weight on small diameters causes so much less friction on the bearings, that the strain is still further reduced.

There are two ways of building cheeses or cross-wound balls, both of which give similar results, when only one thread is wound on to each cheese; but for several purposes it is found useful to wind two, three, or more ends, side by side, on to the same cheese, and for this purpose the machine de-

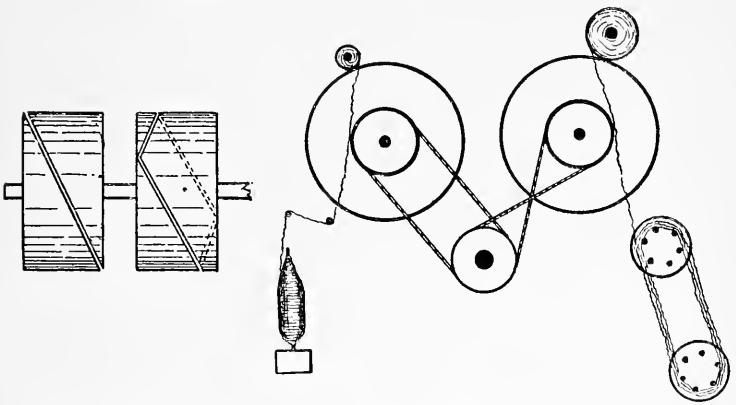

FIG. 93.—Quick traverse drum winder.

scribed second is much the better, because it has an automatic motion which stops the cheese, if any one of the threads going on to it should break down.

Split-drum Winder.—In the machine which is known by this name, made by Whiteley's of Huddersfield, the end is not moved backwards and forwards by any traverse motion, but each drum has a diagonal slit running right round it, or, more correctly, right through it; for the drum is really split to its centre, so that the thread running up from the hank or

bobbin enters at the bottom, and, passing close to the shaft emerges on the other side of the drum at the point where the cheese is rotating as it rests on its upper circumference.

As is shown in Fig. 94, the slit traverses from side to side of the drum in half a revolution, completing the double traverse as the drum completes one turn; and as the cheese is driven from the drum by friction, the take-up of yarn must continue the same as the surface traverse of the drum, no matter whether the diameter of the cheese is 1 in. or 4 in. This gives a uniform take-up and tension, together with a traverse motion so smooth that, like the ordinary drum-winder, the speed is only limited by the rate at which the yarn will come from the hanks or bobbins being wound. For this reason the machine is without a competitor for strong yarns, which can be run at high speeds, because—

1. The traverse motion of the slit across the face of the cheese is of equal speed at every point.

2. There is no dwell at either end of the stroke.

3. And as there is no mechanism needed to move the yarn backwards and forwards, there is no reciprocating motion or traverse rod to jerk and vibrate.

With drums 12 in. in diameter running at 200 revolutions per minute, each drum would wind 630 ft. per minute, and in that time the yarn would have moved 400 times across the face of the cheese, laying the yarn at an angle of 15 degrees to the circumference, and so binding the various threads together that a compact and cohesive ball is the result. In winding from hanks which have been at all matted in dyeing, this pace would probably be so high as to break the yarn; but, on the other hand, good warp sorts which were only being wound for warping could be run at a great deal higher

speed, and it is for this purpose that the frame is pre-eminently suitable.

It should, perhaps, be pointed out here that very high-speed machines do not reduce cost of production in proportion to their speed, because it is impossible for a girl to look after as many spindles, which are winding 1200 ft. per minute, as it would be if they were running at only half that speed. In fact, if the work is to be well looked after, the cost of wages in both cases will be about the same, but the high-speed machine will naturally save floor space, and it may do more work in proportion to the power absorbed.

Quick Traverse Winding Frames.—If we take 15 degrees as the lowest angle which will bind the yarn into a ball which will stand packing and handling, it is clear that the relation of output to traverse must be the same for all frames which are building cheeses, because, for every 38 in. of yarn wound, the thread must be taken twice across the face of the 5-in. cheese, and this necessarily means that some traverse motion and bar must move a series of guides, one for each cheese, backwards and forwards once in that time. For yarn which would wind at 1200 ft. per minute, it is obvious that the bar would have to move at a speed of 170 ft. per minute, and reverse its motion instantaneously 400 times in doing so. As yet no motion has been found which will stand this strain for any length of time, and most quick-traverse machines cannot compete, where speed alone is a desideratum, but there are several of them which do good work at more than half that speed; with the additional advantage that four parallel ends may be wound together on to the same cheese, being so arranged to run through detectors, that all of them stop at once, if any one of them breaks down.

Where three- or four-fold yarns are required with very little twist, practical men know that it is almost impossible for any girl to "mind" more than a very few twisting spindles efficiently, if she is twisting from spinning spools; thus the output of a twist frame is greatly less than calculation, and money is lost; but if the same yarns are first wound parallel on to cheeses and sent to the twist frame in that condition, there is no possibility of one end breaking whilst the others run, and there is no artificial limit to the speed at which the work may be turned out. All winding is an illustration of the fact that the introduction of an extra process may actually save money, and in this particular way the development of winding has not yet reached perfection.

From what has been said, it is easy to see that the efficiency of a quick-traverse machine depends on the speed at which the whole series of guides can be moved, and this in its turn depends directly on—

1. The nature of the cam, or other motion, used to obtain a rapid stroke and instant reversal, without jerk or vibration.

2. The weight of the traverse bar and moving parts.

3. The nature of the guides; for it must be possible to thread them without stopping the frames.

In all these respects the machine made by Arundel & Co. is wonderfully efficient, and is here taken as an illustration.

In all slow-moving heart motions, cams are only used to move a bar or bowl in one direction, the weight of the rods moved, or springs, being used to give motion in the reverse direction; but when the speed is very high, as in the present case, a heart would literally throw any bowl from its point, and cause vibration which no machine could possibly stand, and therefore a double-action cam is necessary, which makes

both up and down motions positive, and prevents all possibility of a jump or jerk at the turn. In the motion adopted, a cam is used, which gives a lift, not at right angles to, but parallel with its axis. It is a cylinder cut off obliquely, in such a way that for each 30 degrees which it revolves, its working edge approaches a certain distance nearer to its line of true circumference, until it has completed half a revolution. Then the motion is exactly reversed. Against this cam two bowls are continually pressed at points on its circumference diametrically opposite to one another, so that when one is farthest forward the other is farthest back. The bowls are fastened to a rocking bar which is hinged in the same plane as the axis of the cam, and as both of them are held tightly against the face of the cam, it is impossible for one of them to jump at the top of the stroke, and as they actually run in oil, a remarkably smooth motion is obtained even when the machine is reversing 400 times a minute (see Fig. 94).

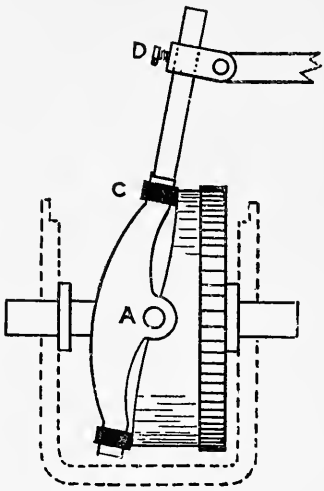

Fig. 94.

The motion has also the great advantage that cheeses of any length can be made on the same frame by a very simple adjustment. For instance, if the distance from **A** to **C** is 4 in. and the pick of the cam 2½ in., it is clear that a point **D** on the rod, 8 in. from the centre **A** will move 5 in., and other points between **D** and **C** will move 4 in. and 3 in. respectively ;

so that if it is desired to make a 5-in. cheese, it is only necessary to attach the rod connecting the traverse bar to the point **D**, whilst for 4-in. and 3-in. cheeses, connection must be made nearer to the centre **A**. In this machine it is also possible to alter the ratio of speed to traverse, by changing the wheels which drive the cam; and as the yarn guides pick up the threads automatically, as soon as the cheese begins to run, everything is provided for doing cheap and efficient work.

8. **Warping** is a very simple process for laying side by side any number of ends of equal length, either on a beam ready to be put into the loom, or in a ball or chain, from which they can easily be run through a reed on to such a beam. In addition to being laid side by side, every end must be leased, or so separated from its next neighbour, that each end in turn can not only be selected separately for "twisting in," but can be selected exactly in the order in which it came when it was put on to the mill.

Probably the ultimate object and reason for leasing are less understood than any process of equal simplicity in the trade, and this may be due to the apparently complex arrangement of the threads on the leasing pegs of an upright warping mill. The only way for a student to get over this idea of complexity, is to learn to warp by hand, and to beam, to dress, and to twist in a warp, with his own fingers. A thorough knowledge of all that these processes mean, if acquired in this way, would put a practical spinner in a position to remedy many trifling errors that may give annoyance to the weaver of his warps, for the intricacies of manipulation are such that no amount of explanation in print will ever make them clear.

The *old-fashioned upright warping mill*, with its huge swift, 15 or more yards in diameter, has been too long in use,

and is far too well known, to need description here; but it may be of interest to compare points, in which the different types of warping differ in theory. For instance, in the upright mill the heck rises or falls steadily throughout the winding on of each 200 ends, so that the first 200 are arranged in a spiral which falls about 4 in. in each revolution, so that a mill which is 10 ft. high will hold 30 circuits of 15 yds. each; that is, it will take a warp 450 yds. in total length. When these first 200 threads are in place, their ends are separated in such a way that alternate threads are taken under and over pegs placed for the purpose. The heck is then lowered ready to begin again at the beginning, but the threads are first divided into strands containing 40 or other number convenient to the weaver, and another 200 ends are then run on to the top of the first layer, throughout their entire length. This process continues until as many as 4000 threads may be laid on the mill in one long spiral, possibly 3 in. wide and as much as $1\frac{1}{2}$ in. thick. If this thickness is reached, the diameter of the final wrap is increased to 15 ft. 3 in. instead of being 15 ft., as in the case of the first one; which means, in other words, that the outer layers are 1 ft. in 60 or 1·7 per cent. longer than the first which was put on to the mill, so that when the threads are stretched out on to a beam those on one side must necessarily be slacker than those on the other.

Fortunately, the drag applied in dressing, in order to get the yarn tightly on to the beam, is so great that all the threads are stretched more or less, and none of them appear to be slack; but even in this case, those which have been most stretched will now be lightest in weight, and will lose weight exactly in proportion to their diameter when on the mill, or in this case, to one count in 60.

When the desired number of ends have been run on to the mill, the whole is taken off together, and linked into a plaited chain, prior to being packed into a ball, from which it can be run on to a beam, either by the spinner or the manufacturer. To get the yarn level on a beam it is necessary, first, to run the threads through a coarse raddle (a kind of comb) on to a back beam, from which it is taken, two, three, four or more ends at a time, through each separate division of a sley, so that it reaches the final beam uniformly divided, and equally spread over every part of the beam surface. Heavy friction can be applied to the back beam, so that the yarn may be wound on to the warp beam under great tension, in order that the greatest possible length may be put on to the beam, and a large number of pieces woven without the necessity for twisting in another warp.

Dressing not only ensures that the threads are all parallel and tight on the beam, but it also gives the spinner an opportunity to take out any faulty pieces or slubs, which are very easily seen and removed as the long stretch of threads moves slowly forward from one beam to the other.

9. Machines in which Warping and Beaming are combined are now very general, wherever warps are made for use at no great distance from the spinning factory. Unfortunately, the great weight of beams and their flanges makes the extra cost of carriage prohibit their use whenever the warps have to be sent long distances by rail or sea.

There are so many different varieties of machines in use for this purpose that it would be impossible to describe them all. Only two types have been selected from them, and as far as possible they will be used to make clear and to contrast points of special importance which occur in many different types.

Warping and beaming machines should be designed with a view—

1. To measure off on to the beam the requisite number of threads, so that every one of them is not only theoretically, but actually, the same length and under equal tension.

2. That the greatest possible length and number of threads may be put on to a beam of given diameter.

3. That the best possible work can be done whilst using quite a small number of bobbins, so that the stock necessary to fill the machine is always small.

4. That the leasing may be easily and quickly done.

5. That the creel and other parts should be so arranged that no knots, caused by tying in new sets of bobbins, can get into the warp.

6. That the combined processes of warping and beaming may be done at the cheapest possible rate per pound.

At first sight it would seem simplest to take a number of bobbins exactly equal to the number of threads required in the warp, and to run a thread from each of them through a sley direct on to the warp beam; but if one warp of 2800 threads were to be made in this way from full warping bobbins, it would require 2800 lb. to fill the machine, and even if five warps were to be made of similar particulars, say 250 yds. long, only 250 lb. of yarn would be required, and there would be an enormous amount left in stock; moreover, no creel of practical dimensions could be made in which 2800 ends could be handled in such a way that all of them could be reached by the warper, and therefore this system has never been adopted.

Four hundred bobbins are a very large number to use with economy, and creels to hold 250 or 200 are still more common for the ordinary size of worsted warps.

In the cotton trade, if 10 warps were required 56 in. wide on beam and of the dimensions already given, a creel might be used with 280 bobbins; the ends running through a reed 56 in. wide, so that 5 of them would be wound on to each inch of breadth of the beam. When such a beam was full it would contain 280 ends of 2500 yds., weighing 50 lb., if the counts were $^2/50^s$. Ten of these "back beams" would be made, and then all of them would be run together straight on to the warp beam. If ten warps of exactly the same dimensions were required, each back beam having only one-tenth the number of ends, would hold ten times the length which it is possible to put on to one warp beam, and therefore ten warp beams of 2800 ends by 250 yds. could be filled from ten back beams each holding 280 threads 2500 yds. long.

This system of mixing the ends from all the beams, over the whole width of the warp, gives great uniformity of tension and stretch; but the necessity for carrying about the heavy back beams, and the smallness of orders which often have to be executed in the worsted trade, has kept it confined almost entirely to cotton.

Cheese or Sectional Warping is a modification of this system which has successfully been employed in the worsted trade. With a similar creel of $^2/50^s$ counts, 280 ends would not be run on to a beam 56 in. wide, but on to one specially constructed with thin steel flanges only 5 in. apart, so that each cheese would contain 280 ends 250 yds. long, with 50 threads in every inch of its width, and would weigh 5 lb. To complete a warp, 10 of these cheeses would be made from the same yarn, and when all were complete they would be threaded on to a strong iron shaft, on which they could not rotate

separately. The threads from all the cheeses would then be collected, and would run side by side like ten broad ribands on to the warp beam; they would run perfectly straight, and any desired tension could be put upon them.

Machines of this type did their work very well, but like the back-beaming method they involved the handling of very heavy cheeses and beams, and the type which is now most popular, is designed to avoid anything of the kind, and at the same time to secure the building of a satisfactory beam, containing the greatest possible amount of yarn, from a comparatively small number of bobbins.

The machine illustrated on p. 264 works on the sectional system, but its success lies in the ingenious method by which the sections can be built without the necessity of flanges to support their sides. As the 280 threads come through the reed and the rollers, they resemble a riband 5 in. wide, with 50 threads per inch, but, of course, they have no cohesion transversely, and could not be built up into a square-sided section, as would be possible with a woven riband of the same width (see Fig. 95). If such a formation were attempted the upper threads would squeeze the lower ones out of place, and all those near the sides would fall into disorder. Such confusion has been avoided by moving the ends slowly sideways along the swift as it rotates, laying them very much in the same way that yarn lies on a paper spinning tube; it is, in fact, laid exactly as yarn lies on a "pirn," but the threads are run on to a swift 5 ft. in diameter instead of on to a beam, because every hundred yards that is wound on will make fewer wraps than it would do on a beam only 5 in. in diameter. If the riband of yarn commenced running on to any part of a flat swift, and was then traversed slowly sideways, it is clear that

the successive layers would have to take the position shown in Fig. 96, and those parts of the top layer which rest on the swift would be shorter and under much less tension than those on the top of the pile of threads, so that when they went on to the beam, they would be thick, curly, and tangled. To avoid this confusion the ribs of the swift are made to end in a series of chocks or inclined planes, which represent the head of the pirn, so that when the yarn traverses, every layer of threads is maintained horizontal and at equal tension throughout (see Fig. 97).

When 250 yds. of the first 280 threads have been run on to the swift, a lease is taken and the ends cut off; then the rollers and sley are moved 5 in. to the right, so that another

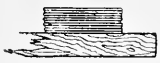

FIG. 95.

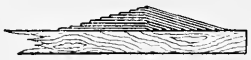

FIG. 96.

FIG. 97.

wrap of 280 ends can be laid on the swift, edge to edge with those already in place. Only the first layer of threads actually lies on the swift; the remainder mounting the slope, not of the chocks, but of the surface of the first wrap, at exactly the same speed, so that the two wraps continue edge to edge throughout their entire length, every portion of each being parallel with the swift. This process is continued until ten wraps have been laid on to the swift, and although the sections are laid on separately the final effect is that of one layer of 2800 ends side by side, exactly 250 yds. long with 50 ends in every inch, all of them parallel throughout their entire length, but all of them moving slowly sideways and outwards, just as the first edge traversed slowly up the slope of the chocks. As

each wrap is measured out by the rollers, and not by the diameter of the swift, the increased diameter of the outer layers is of no consequence, and their arrangement prevents their falling sideways or collapsing, so that they are equivalent to ten sections built at right angles. The only difficulty in getting them from the swift to the beam is that when the extreme outside threads of the outer wrap are exactly opposite the flanges, the same threads of the inner layer are 3 or 4 in. to the left of the flange. It is quite clear that if the beam began to draw the yarn from the swift whilst it was arranged in this way, the first few yards would run straight forward from one to the other, but as the yarn was unwound some ends would soon be left by the traverse on the outside of the flange, running entirely to waste.

In order to keep the two extreme outside edges exactly in line with the inside of the flanges, during the whole time the warp is running off, it is therefore necessary that either the swift with the warp, or the beam should move sideways, just as much as the threads in the upper layer are to the left of the same threads in the layer lying on the swift. As the swift is firmly secured in bearings, it is clear that the beam must move sideways as it fills; but as the amount which the beam takes up at each revolution increases as it fills, it is clear that no automatic screw motion on the beam shaft would keep the beam in line in the edges of the warp all through the unwinding, and the difficulty is overcome very cleverly by driving the beam from one set of gear, and at the same time altering its lateral position by a screw or ratchet motion which is not directly driven, but is moved a certain number of times by the swift, every time it is pulled once round by the beam; and therefore the motion of the beam sideways has

no relation to the number of its own revolutions, but to the number of yards which are wound off from the swift. This keeps the relative positions of the beam and the yarn on the swift always the same, so that in practice the most satisfactory results are obtained; various layers of yarn being as parallel on the beam, as if they had undergone a proper dressing process

CHAPTER XI

DEFECTS AND REMEDIES

The exhaustive study of the defects inherent to all worsted spinning would be far too extensive for the limits of a single chapter, and at the same time it is a subject so essentially practical, that it is difficult to make it entirely clear in print. Many serious defects in finished goods are caused by faults in the yarn, which are so slight as to be invisible in the yarn itself; and most of those which are difficult to remedy are caused by misadjustments or imperfections in machinery which are often so subtle as to defy the ability of a practical man, who knows exactly what to look for, and, within a very small compass, where to look.

Photographs of faulty yarn might give some idea of the nature of a defect, to those unacquainted with it by practical experience, but they might convey a very erroneous idea, and they would only be useful in cases of faults which were so glaring that they would be very easy to remedy. The following tabulation is therefore given rather as an index of faults, showing the place where each may originate, than as a treatise from which the novice can learn all about their construction. If a student in a textile school is ever to be equipped with a knowledge that can fit him for management, it is just as essential that he should know every kind of fault, as that he should know a perfect yarn when he sees

one; for a manager ignorant of defects and their causes would be like a doctor trained in physiology with no knowledge of pathology. Such a training could be given better in a textile school than in any other place. Machinery could be set to make every kind of imperfection, and could then be altered by the students, at first under supervision and afterwards alone, until perfect work was turned out. Information so obtained would never be forgotten, and the man who knows how to make imperfections is the most likely man to locate them, when they occur in practice.

All defects may be divided in the first place under two great heads.

1. Those caused by wool of unsuitable length or quality being used for any desired count or kind of cloth. With these we have nothing to do here. They can only be avoided by the manager who knows his business, and knows it very thoroughly, from long experience or much experimenting.

2. Faults caused by defective or unsuitable machinery, by accidents, or by careless work. To the manager these will again be divided into two heads—

(1) Those caused by faults already in existence in the tops as they come to him to be spun; and

(2) Those which are produced in the drawing and spinning machinery through which the tops go.

All of these will be dealt with according to the priority of their causes, and descriptions of the resulting defects will be given in each case.

It is, of course, the duty of every spinning manager to see that the tops as they come to him are fit to spin to the counts for which they are destined; and if a given quality has once given satisfaction, no trouble must be spared to

see that every following lot, which is to be used for the same purpose, is equal in average length, in quality and in colour. If possible, it should also be ascertained that the wool has been grown in the same district as the previous lot.

Class I. **Tops**: Fault 1.—*Noil knots or "neps"* in a top are an almost certain sign that sufficient short wool has not been removed in the combing; or else that the comb circles have been too coarse, or in bad condition. The presence of an excess of short wool in the first drawing processes, is liable to cause ridges of short material at short intervals along the sliver. As the wool goes through the drawing this will develop into inequalities or "twits" in the roving, which will cause uneven yarn, which varies in thickness from say 16 to 32 fibres in a 60^s thread. Noil knots or neps themselves, if present in great numbers, invariably show on the outside of the yarn when it is spun, and also on the surface of the piece. In this condition they are easily removed in finishing, by cutting or singeing, but they are much more apt to combine in the early processes, to form larger lumps or small slubs, which get into the body of the sliver, the roving, and the yarn. They are too short to be caught and extended by the action of the drafting processes, but they often contain fibres long enough to be affected by twist, and so they are bound into the body of the thread. In the piece they are further fastened by the interlacing of the threads, and even if removed in burling, before dyeing, they may leave a thin place or a hole in the cloth, on account of the way in which they have pushed the neighbouring threads from their normal position. If not removed, they remain in the piece as an unsightly lump, for which the spinner is likely to be held responsible.

Class I. Fault 2.—*Bad piecings* caused by careless work in the combing gill-boxes are often responsible for lumps in the sliver, which may be either large or small. They do damage very much in proportion to their size, and by far the best way to avoid ill effects from them, is to have them looked for and taken out by the girls who "mind" the drawing boxes. Their peculiar looped structure makes it quite impossible to draft them, and the only result of gilling is to break them up into smaller lumps which go forward to the spinning as slubs. If slubs can be said to have any advantage at all, it is that they generally appear on the surface of the sliver in the drawing process. It is seldom that they remain quite buried, and for this reason the drawing hands can pick out the lumps and slubs, if they are wisely encouraged to do so.

Class I. Fault 3.—"*Feather edges*," or slivers with ragged sides, are very apt to cause small slubs of the same type as the above. There is always a tendency for the fibres to continue adhering to the leather of a gill box instead of going to the calender rollers, and when the sliver is feather-edged, the loose wisps of fibre will often adhere to the leather for a short time, whilst the bulk of the sliver continues to run forward. Whenever such a group of fibres turns back, a small loop will be formed, which is certain to form the nucleus of a slub of the type already described, but in this case it will be composed of rather longer doubled fibres.

Class II. **Gilling**: Fault 1. *Piecings*.—Every sliver which is carelessly put up to the back rollers of a gill box in such a way that the points of the fibres do not lie perfectly straight, but are turned backwards, will cause a small loop to be formed, which is likely to develop into a slub of the

type already mentioned. It is not easy for the very best hands to avoid this fault with certainty, and the result is very difficult to detect and to locate afterwards.

Class II. Fault 2.—*Feather-edged sliver* may be formed in the drawing just as in the combing gill boxes, and the result is equally bad, for whenever a fringe of sliver turns backward along the leather, there is likely to be a loop which will subsequently form a slub.

Class II. Fault 3. *Cut sliver.*—Generally speaking, it is true that the presence of a leather between two rollers will prevent either of them from cutting the wool fibres, but there are times when this is not the case. If the pressure on the rollers is excessive, and the material difficult to draw, the fibres will sometimes cut. The presence of a lump in the sliver may so greatly increase the pressure on adjacent fibres that they will be bruised and broken, or "cut," in passing through the rollers. If a leather happens to come loose at the joint in such a way that one end can turn back, there will be three thicknesses of leather instead of two, and the enormous increase of pressure may then result in cutting.

The kind of cutting which is commoner than all others is due to the presence of foreign matter in the leather; for instance, a faller pin may break and drop on to the fibres. As it is drawn through the rollers it is squeezed into the leather, and will there remain imbedded, after cutting in two all the fibres which were nipped between the low roller and the pin. Sometimes it is not fixed very securely in the leather and falls out after punching one hole in the sliver; but more generally it remains in the leather, and every time it comes round to the roller, it severs every fibre between

itself and the low roller. The holes thus made are exactly the length of the piece of pin, often only a quarter or half an inch in length, but each place where the fibre is cut, will often develop into a slub in subsequent processes, because an extra amount of short wool is present at that point, and a great many of these short fibres end on the same line. Clearly all the fibres in front of the cut will be drawn away in succession as their tips reach the front roller, just as the fibres on both sides are also being steadily drafted; but the straight row of ends behind the cut must all reach the roller at the same time and go through together, to form a small butt-ended slub, of a type very often seen in drawing.

Class III. **Drawing**: Fault 1.—*Ratch* which is much longer than the longest fibres, will allow short fibres to slip and so cause lumps and unevenness in the sliver and roving.

Class III. Fault 2.—*Ratch* shorter than the longest fibres will cause breakage and consequent loss of adhesive power, or spinning property.

Class III. Fault 3.—*Too much draft* will cause irregularity in this and subsequent processes, resulting in yarn with uneven places of considerable length.

Class III. Fault 4.—*Too little draft* may cause very similar defects.

Class III. Fault 5.—*Excessive and irregular drag*, especially in the later drawing processes, may cause slight drafting between the front roller and the spindle, with consequent irregularity of size, which would cause long thin places in the yarn and a general tendency to unevenness and light weight. Cone drawing which is not perfectly adjusted is particularly liable to produce this fault.

Class III. Fault 6. *Waste.*—Wherever wool fibre is

drawn by metal rollers working against leathers, or by leather-covered top rollers, not only is the leather slowly worn away by friction, but it gets covered with a film of scurfy waste composed of grease, fibres, and scales. When fibre which is not in the best condition for treatment is being worked, the amount of this deposit increases rapidly. Fibres also adhere more or less to the iron roller, and to prevent them accumulating, stationary rubbers are arranged to press against the roller and remove them, and brushes are often placed so that they brush up and remove the fibres from the leather rollers. If these brushes are not continually watched and kept clean, they soon become clogged with wool and grease, and when they are in a position to hold no more fibres, little tufts get detached and go round with the roller, until they reach the sliver just where it is being drafted: here they are almost certain to get entangled with the moving fibres, and to go down on to the bobbin, in the form of dirty and irregular lumps, which are very difficult to extricate. These may break up in subsequent processes into smaller pieces, and be tightly embedded in the body of the yarn. They differ from slubs in appearance, and wherever they occur they are known as "waste."

Opinions differ as to the best method of dealing with this difficulty; some firms use brushes, some do not, preferring to clean the top rollers regularly by hand, or with leathers provided for the purpose.

Cloth covered rubbers are almost always used on the low rollers, but like the brushes they soon need cleaning. If they are neglected, groups of fibres escape and get into the sliver. To remedy this defect rotating rubbers have been applied with good results behind the fixed rubbers; the

latter loosen and collect the fibres until they can hold no more, and when the fibres begin to protrude behind them, the velvet surface of the rotator picks them up, and winds them into a lap around itself, from which they have no inclination or opportunity to get away.

This fault is liable to occur in a greater or less degree in all processes up to and including spinning.

CLASS III. Fault 7.—"*Bellassed*" *rollers* are those on which a portion of the upper or outer leather has become loose from the wood, iron, or under leather of the roller. For some reason which involves the abstruse theories of rolling friction, the loose portion fails to draw with the same grip as the firmer part. When we consider that soft-covered rollers are loose all over, and that leathers do not even touch the fluted rollers at all points, this failure to draw must strike us as curious; but the fact remains, that the fault is very serious in later processes, especially in roving and reducing, for though the irregularities are not very serious when they first appear, they are extended into longer lengths in the spinning, and form uneven threads with faults recurring at distances equal to the circumference of the roving top front roller, multiplied by the draft of the spinning frame (say 12 × 5, or 60 in.); and when these uneven places are steadily repeated, as they are by the steady rotation of the front roller, they naturally make very irregular yarn and pieces.

Unless means are taken to inspect every roller periodically the defect is liable to go undetected for long periods, because the inequality of the rovings is never so great as to make it visible whilst the box is running; nor is it likely to break down the ends. Faulty rollers cannot be detected by sight, but it is most important that they should at once be

discovered, and this can only be done by feeling each roller as it runs; the softness of the loose portion being easily and immediately distinguishable to the touch of a trained hand.

This fault applies to every process including spinning.

Class III. Fault 8. *Piecings.*—The necessity for making and taking out piecings in all drawing boxes after the gills, is due to the absence of fallers and their pins, which prevent the extreme end of a sliver (which is running out) from going undrafted through the front roller, after it has been released from the back roller. If one of four ends behind a drawing box be running out, it must be clear to all readers that it is the end of the old sliver and not the beginning of the new one which makes the lump after drafting; this can easily be demonstrated or observed, for if a pointed sliver be run into an empty box, no excessive thickness will be visible in the first few inches which come from the front roller. Clearly the bulk of the sliver is fast in the back roller, and drafting must begin the moment the point of the first fibre touches the front roller; but in running out, it is quite different, for the moment all fibres are free from the back roller the weight of the carriers is quite inadequate to hold them, and every one of them goes undrafted through the front roller, as a lump.

It is practically impossible to make a piecing behind a box so good that this end lump will not show, and consequently the joining is usually made in such a way that the points of the new sliver go straight to the front roller and form many inches of reduced sliver, before the end of the old sliver passes the back roller and slips undrafted through the front roller on to the bobbin. This makes a well-defined lump which is quite detached from the sliver at the end

nearest to the rollers, so that if it be drawn gently away from the point of attachment, it can be removed without turning other fibres in the wrong direction, in such a way that the place of the piecing is very difficult to find. If by any accident or carelessness a piecing lump is not taken out, it is certain to cause serious damage later on, for it is clear that a lump which does not reach from the back to the front roller of one drawing box is not likely to be drafted in any subsequent processes.

Class IV. **Roving**: Fault 1.—*Variation in twist*, due to slack or to excessively tight bands, will seriously affect the spinning. If the twist be too hard for any reason, drafting in the spinning will be irregular, in other words, the fibres will "pluck" rather than draw regularly, and if the twist is too soft, due to slack bands, several things may take place.

If there is very little twist indeed, the roving may be so soft that it will not run off the bobbin, and it must all be made into waste; but a more serious defect, of a much more subtle kind, may result from the same cause. We have amply proved that the twist in a roving affects the twist in a yarn which is made from it, and this is only natural, for the twist cannot be expected to disappear without some cause. The twist which existed in one inch of roving will be spread out in the spinning over 5 or 6 in. as the case may be, and if the roving for a 60 yarn contain $1\frac{1}{2}$ turns per inch, after it has been drafted and before receiving twist again, it would be a 60 yarn containing three-tenths of a turn per inch. Wherever it is necessary to have a fine botany dress yarn as soft as it can be spun, the addition of this three-tenths is a factor of some importance, its absence or presence must be calculated on, and in extreme cases this alteration may even affect the spinning.

Left twist in roving is more serious still, simply because there would be three-tenths to deduct instead of to add to the calculated twist of the frame, for any given count; and this difference of nearly a turn per inch might have very serious effects on the appearance of a piece, occurring as it would do in complete bobbins, forming bars of harder or softer yarn right across the piece for a space of 3 to 6 in. at a time. After dyeing this would probably show as a different colour. Such an accident might easily happen. Slight carelessness in putting on a roving band often results in the upper instead of the lower side of a driving pulley leading on to the right of the spindle whorle, and consequently the spindle would rotate in the wrong direction.

The absence of twist also gives the fibres greater freedom of motion on one another, so that the nature of the drafting will not be exactly the same in both cases; probably the yarn will vary slightly in size on this account, but this depends so much on the length and quality of the wool, that experiment is the only method of finding how it will affect any given quality.

Class IV. Fault 2.—"*Bellassed*" *rollers*, as described in Class III., Fault 1, are liable to occur in the roving with very serious effects.

Class IV. Fault 3.—*Waste* may accumulate on the rubber until there is sufficient to run round the roller and get into the roving (see Class III., Fault 6), making uneven ragged slubs which are difficult to pick out in later processes.

Class IV. Fault 4. *Uneven Roving.*—It is also possible for accumulations of waste to adhere to the rollers, and when a lump gets on to the back roller it may cause a particularly serious fault. Such a lump is usually caught by one edge of

a roller, in such a way that every time it comes round, a part of it goes between the upper and lower back rollers, and lifts one edge of the upper one. This relieves the fibres from all pressure as they come through, and for the whole time the roller surfaces are apart, the full size of the reducing is drawn through the back rollers by the front rollers without any drafting or reduction taking place. This means that 6 in. to 1 ft. of roving runs forward on to the bobbin, six times the thickness that it ought to be, and unduly hard in consequence. As the waste moves round, the back roller once more exerts its normal pressure, drafting is resumed, and perfect yarn is again produced, so that with a 2-in. back roller and a draft of 6, the box would be turning out say 30 in. of normal roving interspaced with hard twisted lengths of from 9 to 6 in., which would be six times the normal thickness. Such work is, of course, useless, but the impossibility of spinning such roving prevents it causing serious damage to the pieces. On the contrary, when the same fault takes place in spinning, it causes very expensive damages, because it does not follow that the yarn will break down. The waste may fall off the back roller, so that only one thick place is made, and the bobbin may go forward to the loom, or to the twist frame, without showing any sign of the defect. It would be impossible to take such yarn out of a fine piece without leaving a very bad mending mark.

Class V. **Spinning Faults**, *i.e.* all faults caused in the actual spinning process are naturally very serious, because in the case of single wefts, which form such a large proportion of the Bradford trade, they go straight from the frame to the loom, and afford very little chance of detection. A certain proportion of these faults may be detected, if the process of

looking over is done as carefully as it ought to be, when the bobbins are taken from the frame; but the process becomes so much a matter of habit to the majority of the boys who do it, that it is the exception rather than the rule for all defects to be detected, and a continual inspection of frames by overlookers and manager is necessary to prevent bad work going to the loom. It will also do a great deal to prevent the waste caused by its production. On the simple ground that prevention is better than cure, not only the weft, but the frames themselves, should be subject to the strictest inspection at frequent, regular intervals.

Of the twelve faults tabulated under this class, those caused by *waste, rollers, left twist,* and *lumps on the back roller* have already appeared in regard to other processes; but the fact that there is now no process, following the spinning, to modify their results, makes them more serious and more difficult to detect and to cure, until the damage is done.

Class V. Fault 1. "*Bellassed*" *Rollers.*—Rollers which have a portion of the leather loose, are apt to cause greater damage than almost any other single fault in a spinning frame. Hard-covered rollers have their leather covering secured by glue or other cement to the wood, iron, or cork of which the roller is composed. Often two thicknesses of leather are glued to one another to give additional springiness. This type of roller is deservedly popular, and is extensively used for botany and medium crossbred wool. It is also popular with many spinners, in preference to the soft roller, for 40^{s} qualities. The necessity for absolute uniformity of surface makes it impossible to secure the surface by nails or sewing of any kind, and its one drawback is the tendency of the leather to work loose, either at the joint or at some other

point, if inferior glue has been used, if the work has been carelessly done, or if the natural fat has not been removed equally from all parts of the leather (see p. 132).

It has already been stated, that the theories involved are very complicated, and when we consider that there is no difference between the draft of a hard roller and a soft roller working on the same frame, and also consider that a soft roller is really a roller "bellassed" or loose on every part of its surface, it is not easy to see why the yarn from a particular bellassed roller should be so very uneven.

Fortunately, or unfortunately, the effects of this fault are too well known by practical men to need demonstration here, and readers must be content to take the statement on trust, that it is a fault which must be guarded against by every available means. Although the leather is stretched and fastened on to the rollers whilst wet, it is well known that a patch where the glue has come loose soon gets slack, by reason of the continued rolling-out process. Doubtless it is the slackness, not the lack of adhesion, which causes the lumpy yarn, and it is also the slackness which makes it possible to detect faulty rollers by touch.

Class V. Fault 2.—*Dry rollers*, i.e. top front rollers which have not been properly oiled, have a very curious effect. To understand the reason it is well to look carefully at the frictional surfaces. The leather of the upper roller may touch the low roller for a space measuring perhaps $\frac{1}{4} \times 1$ in., whilst the surface of the central bearing will be about $\frac{1}{2} \times \frac{1}{2}$ in.; the surface of the two side bearings will be considerably less. Owing to the relation of their diameters the friction on the leather has eight times the power of the friction on the bearing, and when the bearing is well oiled

there can be no chance of its retarding the rotation of the top front roller; but if the central bearing once gets dry and hot, the axle will swell slightly, and if it fit tightly in the half-round brass, the friction increases to such an extent that the contact between the two rollers is not sufficient to overcome it altogether, and the surface of the upper roller will not move as fast as the surface of the lower one. This means that there is a severe rubbing action on the fibres in the nip. There is sure to be more than one layer of fibres between the rollers, and therefore the lower ones attempt to move with the low roller, whilst the upper fibres go no faster than the upper roller, thereby making the peculiar type of rough and uneven yarn which is known as the result of a dry roller.

The same thing may happen at the back roller, but the effect is not so serious, because the draft straightens out any curly fibres before the twist is put into them.

Class V. Fault 3.—*Nicked rollers* are often capable of doing damage which seems altogether out of proportion to the microscopic nature of the defect in the roller, and the formation of nicks is obscure enough to merit some little notice.

In every spinning frame, behind the back roller there is a guide, through which the roving runs to the roller. If this guide were stationary, the end would always be drawn by exactly the same part of the front roller, and that portion, little broader than the width of a spun thread, would be worn away in a day or two. To prevent this happening, the thread is made to traverse backwards and forwards across the face of the rollers, so that the wear is well distributed. Unfortunately the eccentric motion usually employed for this purpose does not give the same amount of wear to all portions, for though the thread moves at a fairly uniform pace backwards

and forwards, there is a time at each end of the stroke when the traverse is stationary, and therefore at each side of the roller there is one point which receives more wear than all the rest of the surface; it is at that point that nicks usually occur. The same thing also applies to the carriers. Wooden carriers are regarded as so essentially durable that they do not receive much attention, and are often left to run long periods without renewal; in course of years they also form slight nicks, into which the end runs every time it moves across. In a bad case, if the end has once got into a nick it will stay there until the traverse guide is nearly halfway across the roller again, and for the whole of that time it is drawn by exactly the same part of the front roller. Under such circumstances a new front roller may be nicked in the course of a very few days.

Nicked rollers do great damage, because, like dry rollers, they allow some fibres to go forward and some to be less drafted. The fibres which lie in the nick are not drafted at all, and the effect produced is very similar to that of a fancy yarn, where two strands are paid out at irregular speeds on to the same spindle; the longer one being bunched up, and wound round the shorter one at intervals, so that a nick wide enough to miss a couple of fibres may cause great unevenness, which will recur at each pick of the traverse. As all rollers are liable to this fault it can only be avoided by constant inspection, but if the carriers are also well looked after and kept in perfect order, and if the traverse is not allowed to dwell at the end of each pick, there will be much less liability for the fault to occur.

Class V. Fault 4. *Hard Twist.*—Whilst dealing with the traverse question, it is as well to mention the possibility

of the guide being twisted or bent in such a way that the end may not be in the centre of the front roller, so that it may run off at one side of the roller when the traverse is at one extremity or the other. With 4-in. rollers this fault is almost certain to be detected, because the moment the yarn slips off the roller the supply of yarn is reduced to one-sixth, and the twist continues to run into the undrafted roving, so that it soon becomes brittle and snaps. No matter how the traverse may be arranged, in the case of 4-in. rollers it is never possible for the yarn to get back again into the nip, and so down on to the bobbin, without breaking down, but when the rollers are only $2\frac{1}{2}$ in. it may happen, under certain circumstances, when the draft is very low. If it ever happens that the yarn could slip off the roller and regain its place in a few seconds, the absence of draft would cause a thick place, and the continued twisting, with lessened output, would cause a whipcord twist, which would utterly ruin any kind of cloth. If this intermittent action took place once for every pick of the traverse, there would be many yards of soft twisted fine yarn interspaced, right through the bobbin, by a foot or two of extra thickness containing five times the normal twist. Fortunately, this can only occur in very unusual circumstances; generally it is impossible for the yarn to get back on to the roller without assistance, and if it were put back after a few seconds' displacement, so much twist would run into the roving that it would snap, instead of being drafted, so that the end would break down sooner or later.

All the same, the fault is a very serious one, for it often occurs that a yard of terrible hard thread will run on to the bobbin before it breaks, and if the girl does not notice the reason of the breakdown and fails to pull back the hard

thread, this yard of hard twist will precede a very bad piecing, and there will be a serious damage in the piece; moreover, the reason of the breakage will not be detected, and the fault will recur until the guide on the traverse bar is put in its right position by the overlooker. It is really a machine fault, but the girls should be trained to notice it, and encouraged to report everything of the kind at once, as it will save them labour and will obviate much imperfect work.

Class V. Fault 5.—*Waste on the back rollers* may cause exactly the same defect as in the roving (see Class IV., Fault 4), but the unevenness in the yarn is much more serious, because it does not follow that the yarn will break down, and all uneven work will therefore go forward to the weaving.

Class V. Fault 6. *Laps.*—There is probably no place in the trade where the tendency of wool fibres to adhere to one another, in preference to adhering either to leather or iron, is so clearly marked as in spinning. When an end breaks down, that part which continues to come from the nip frequently adheres to the leather and forms a lap round the upper roller, in spite of its tendency to fall and wrap round the low one. The lap will, of course, continue to increase in size until an end is pieced up, or the roving runs out, and if a new roving should be put through the rollers, the fibres from it would follow the existing lap, rather than make a new one round the other roller. So well is it known that loose fibres adhere to one another, that no hand would ever try to make an end run on to the spool without first taking the lap off the roller; but, unfortunately, a lap on the low back roller or carrier does not necessarily break down the end, and for this reason it is far too often allowed to

remain where it formed, in spite of the roughening influence it has on the thread.

In addition to this constant tendency to roughen the yarn, a back roller lap may have exactly the same effect as a lump, if there happened to be two layers of roving at any portion of the lap and only one in others. Wherever the two layers come (at a place, for instance, where two of the strands cross one another), the weight is certain to be removed from the roving which is being drafted; it will not be held securely, and a thick place will be formed (see Class IV., Fault 4).

A carrier lap has a different effect. From force of circumstances the lap often happens to be several layers thick at one end of the carrier, and this means that, of the two ends, that nearest to the lap is relieved of all weight, and the other is also very likely to have the pressure of the carrier upon it reduced. Whichever carrier has a lap formed upon it becomes useless, the short fibres, which it ought to control, go haphazard to the front roller, and the yarn is therefore less even than it ought to be.

Class V. Fault 7. *Double Ends.*—All the spinning faults which have been noticed up to this point have been those due to defects in the rollers, and all those which follow are due to spindles. In this case only, both rollers and spindles are concerned. A sudden draught of air or carelessness on the part of the hand may cause a broken thread coming from one roller to touch the unbroken thread which is running from the nip of the next roller to the next spindle. At times the touching of the one by the other may cause both to break down, but nine times out of ten they will unite, and both will run down as a single thread of twice the normal

size, and more than proportionately twisted. This thick thread will continue to run for any length of time, and as it may take a long time to pull back the whole of it, and as the process will also make a lot of waste, for which the girl may be reprimanded, there is a temptation to separate the two threads without fully rectifying the fault. If this is done, as it easily can be done, there is not much chance of the bad work being detected until it has been woven and made a serious fault in the piece.

Class V. Fault 8. *Slack bands.*—Where the old-fashioned bands are still used, in preference to tapes, slackness is a fertile source of irregular twist; for the bands must be stretched so tight that they are still considerably extended when the wharle is nearest to the cylinder, or else there is sure to be slack twist at that part of the lifter stroke. Because the whorle rises and falls in a straight line, there must be two points in that line which form the base of a right-angled triangle with the centre of the cylinder for its apex, and therefore the increased lengthening and shortening due to the rise and fall of the lifter are easily calculable. With a 5-in. lift on a 36-in. frame, that is 18 in. from the centre of the cylinder to the whorle, the alteration in the distance of the centres is about $\frac{3}{4}$ in. or over 3 per cent. It is possible for a new band to have this elasticity, but as it gets older and saturated with oil it naturally stretches to the length of the longest span and stiffens, so that when the whorle is nearest to the cylinder the band is not tight; in other words, when the lifter is down in a frame thus set, the twist would be softer than when it was at the top (see Fig. 78, p. 202).

For this reason many spinners have adopted tension pulleys and tapes, so that the strain on any tape and whorle

may remain the same throughout the entire life of a tape, however far the lifter may rise and fall, and however much the tape may stretch.

It is clear that a band which has lost its elasticity, and has set to such a length that it is just tight when the whorle is most distant from the cylinder would be very loose with the lifter at the bottom, and that the yarn would receive full twist at one time, whilst it might be 10 per cent. or even 20 per cent. too soft at another. This difference would occur between the extreme ends of the bobbin if the cylinder centre is opposite the whorle when at its lowest point, whereas if the cylinder were raised two inches, the difference would be less, and the contrast would be between the centre of the bobbin and its extremities. For the sake of example, we will assume that the first is the case: in a double-headed bobbin there will then be a change of 20 per cent. in the twist each time the lifter rises and falls, but in a spool build, each pick will be slightly softer at the top than the bottom (because the lifter falls as the spool fills), and each succeeding pick will also be softer than the one before it, until the bobbin is full.

Since the introduction of tape and tension pulley drives, variations of twist have been greatly reduced, but there is one accident which sometimes happened on band-driven frames which was much more frequent with tapes, in the early days of their introduction. If for any reason a tape has run off the whorle, or has never been properly put on to a new tube, the tube will rest upon the tape, and if it revolves easily upon the spindle, there will be sufficient friction to drive it at perhaps half the nominal speed. If the whorle be of the old type tapering to the bottom (Fig. 98),

it is possible for the tape to mount on to that portion which may be from $\frac{1}{2}$ to $\frac{3}{4}$ of an inch in diameter, and in that case the spindle would rotate at much greater speed than it would do with the tape on the proper part of a 1-in. whorle. In the newest form of spinning tube (see Fig. 99) all metal below the lower flange of the whorle is cut away, and the bottom is slightly recessed to take the point of a conical washer which greatly reduces the friction. Even in this case, if the tape were off the whorle, and the whorle resting on the tape as it continued to run round the bare spindle, there might still be sufficient friction to cause rotation, rapid enough to make yarn spin. This fault is, therefore, capable of causing both soft and hard twist, as well as twist of great irregularity, and although it is now decidedly uncommon, it is a fault to be guarded against.

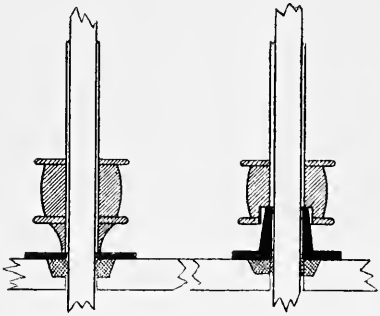

Fig. 98. Fig. 99.

The effect of such irregular twist in a piece would be disastrous, because twist always affects the filling power of a yarn, and the less twist there is, the fuller the piece will appear. In the first case, each succeeding pick in the piece would vary slightly, and every bobbin would begin by being hard, and would get steadily softer until it was empty. If the softest portion of the bobbin were not too soft to weave, it would look fuller, and the cloth would be better covered; but in fine dress goods the hard beginning of the next new bobbin would show plainly, looking

threadier, and showing the different interlacings more distinctly.

Any material alteration in the twist of either weft or warp is also certain to affect its shrinkage in the piece. Sometimes the difference will be visible as the piece comes from the loom, but often it shows more clearly after scouring, and if hard and soft bobbins are mixed, by any fault or accident, the hard-twisted yarn will shrink the most, and the soft-twisted bobbins will show as less shrunk, and consequently cockled places right across the piece.

If very old and very new yarn be woven into the same piece, the same result will occur, although both have been spun with the same turns per inch, for the old yarn will have lost all its inclination to curl and contract, it will *apparently* have lost some of its twist, and, in the piece, the old will differ from the new, quite as much as would two yarns of the same age which contained a different amount of twist per inch.

Class V. Fault 9.—*Dry tubes* may cause effects in all respects similar to Fault 8, and may cause them in a more exaggerated form. The tubes of a cap spindle are always lubricated from the bottom by a washer steeped in oil, to which more oil is added at stated intervals. If the oil in one of these washers gets exhausted from any cause, the top of the spindle will get dry first; and if it heats at all, the tube will become so much tighter, that the extra friction will considerably retard its revolution, and soft twist will result. In extreme cases, the twist will be so soft that the yarn will not be strong enough to weave, in others it may be softer and more bulky than is desired; and cases occur sometimes where the twist is very irregular, because, as the tube rises and falls, more or less of its surface comes into contact with

the dry and heated portion of the spindle, and therefore it revolves more or less quickly at different portions of the stroke.

Class V. Fault 10. *Worn Tubes.*—If good work is to be turned out, it is easy to see that dry tubes must be avoided; they should also be avoided in the interests of economy, for a dry tube will wear away a great deal in a few minutes. From the nature of things it always wears away on one side, thereby throwing itself out of balance in such a way that it continues to wear more quickly still. Thus things act and react; the rotation of a badly balanced tube running 100 revolutions per second, naturally sets up a vibration in the spindle and the cap, which causes wear at the top of the spindle, where the cap fits on to it, and when once this is worn the vibration never again ceases. The larger the cap and the longer the spindle, the worse will the effect of vibration become. Badly balanced bobbins, bobbins with holes too large for the tube, or bobbins which from irregularity of grain have one side heavier than the other, will also affect the balance of the spindle and cause vibration. They ought, therefore, to be rigorously rejected.

This fault may be compared to a malady which, from very small beginnings, gets steadily worse until the final stage is reached. When spindles are running at high speeds it does not require much wear of parts to cause the caps to shake until their edges touch the yarn on the bobbin, or even jump down from their places. If they fall on to the floor, they may crack and be done for, or they may have their edges bruised in such a way that no yarn will spin well upon them in future. If they only touch the yarn, they give the bobbin a peculiar appearance, roughening the fibres so badly that

the different threads become entangled in one another, and making the yarn look rough and uneven when woven into the piece.

Class V. Fault 11.—*Cap-touched bobbins* and jumping-caps may also be caused by filling spools too full. If the lifter be run too slowly in proportion to the output of yarn, the bobbin will get so thick, that its thicker part will not go up inside the cap, but will touch the edge of the cap at each rise of the lifter. When the touching is very slight, the only result is a badly built bobbin, which will not easily unwind, and which will make a rough mark in the piece; but if the spool gets very full, it may lift the cap from the spindle and throw it violently from its place.

Class V. Fault 12.—*Old bobbins* which are worn in the groove into which the driving-pegs fit are liable to jump from their proper place when the spindle is allowed to start suddenly, because one side of the groove gets cut away until it forms an inclined plane up which the pegs can slide. If an end should happen to break down when such a bobbin is partially filled, it is very likely that it will not fit well down on to the pegs when the spindle is allowed to start again; and in that case it is certain to touch the cap, unless it is small enough to go right inside it. The result is certain to be injurious; it may also knock off the cap. The same fault may cause slightly uneven twist, for a bobbin which has once risen over the pegs can hardly ever fall on to them again, and it is then possible for it to rotate less slowly than the tube, although the friction of the wood on the tube is generally great enough to make this loss of twist very minute.

Class V. Fault 13. *Left Twist.*—The ability of fibres to appear bright or dull, according to their inclination to the

light, is never more clearly demonstrated than in this case; and it may be taken as a simple proof of the statement, that woollens are dull because no two fibres lie in the same plane or at the same angle; and that worsteds are bright because, so far as possible in weft and warp respectively, all fibres lie parallel to one another. If a tape or band is put on to a spindle in such a way that it rotates in the reverse direction to others in the frame it will cause serious loss, because the yarn will spin perfectly well, and continue to spin for any length of time. There may be some difficulty in first piecing the right to the left-hand twisted yarn, the ends will naturally be wrapped round the spool in the reverse direction to others, and the girl will find that the spindle must be stopped in another way; but these things do not always come to the overlooker's notice, and he must be a very careful man to detect them. If a left-hand bobbin is woven into dress goods amongst a lot of right-twisted weft, it will appear as a bar, running right across the piece, and looking either brighter or darker than the rest, according to its relation to the light. Many faults may give a similar effect; the bar may simply appear to be caused by a dirty bobbin, but left-twist weft has this peculiarity, that in an altered position in regard to the light, the light and shade change places, so that what appeared as a light bar on a dark ground, will alter to dark bar on light ground, or *vice versâ*, by simply reversing the position, the piece (see Fig. 101).

Class V. Fault 14.—*Cracked spools* must be sorted out and destroyed at all costs, because yarn will never unwind in the shuttle from such spools, and it will be returned to the spinner as tare. Thus he will be compelled to make into waste every ounce of yarn spun on to cracked bobbins.

Class VI. **Twisting Faults.** — The great similarity between the spindles used in cap spinning and cap twisting makes many of the faults of Class V. equally serious in this process, but their causes and effects are alike so similar, that they will only be tabulated, without any repetition of detail.

Class VI. Fault 1.—*Slack bands.*

Class VI. Fault 2.—*Cap vibrations.*

Class VI. Fault 3.—*Dry tubes.*

Class VI. Fault 4.—*Left twist.*

Class VI. Fault 5.—*Slip of bobbins* on the tube deserves some additional comment here, because the conditions are more severe. The necessity for tieing in, instead of piecing any new end, compels the girl to keep the spindle standing, and often to remove the heavy bobbin. There is then great temptation to drop the bobbin on to the rotating tube, instead of first stopping it again. In such a case the inertia of the bobbin prevents its beginning to rotate immediately, at the full speed of the tube; and until it does attain full speed, the driving pegs act like milling cutters, and wear away the off side of the driving groove. This action also causes the bobbin to "dance," and thereby adds to the vibration of the spindle. Very sudden stoppage of the tube by mechanical means has a similar tendency, if the bobbins are worn, but in this case the inertia of the moving bobbin makes it tend to rotate when the tube and spindle suddenly stop, so that the one side of the groove slides up over the driving pegs.

Class VI. Fault 6.—*Accidental right twist* from a frame which ought to be turning out left twist (*i.e.* the reverse of spinning twist) would give a very hard irregular twist, because a 60^s thread which contains 20 turns per inch in the single, ought to receive about 20 turns in the reverse direction

in the twisting process. The fibres in a properly made two-fold yarn are curiously arranged; they are interlaced rather than twisted, the twist of the single yarn being minimized, if it is not entirely cancelled, by the reverse direction of the twist in the second process. If the spindles of both processes rotate in the same direction, each strand would contain 40 turns per inch, which would make it as hard as a crepon yarn.

If such a thread were to get into a warp by any accident, it would show as a hard line throughout the entire length of a piece; and if two or three such threads occurred, near to one another, they would shrink differently from the rest of the piece in finishing and would cockle, or make a crinkled mark along the whole length of the piece.

Class VI. Fault 7. *Left and Right Twist.*—For very similar reasons, a left-hand thread twisted with a right-hand thread, would cause a crinkled yarn; one of them would lose its twist in the process, the other would have the twist added to it, and a fancy yarn would result which would do serious damage to the piece. In the case of soft-twisted yarn the effect would not be very plain in the yarn, unless it were scoured, when the two strands would shrink very differently; but in the finishing of the piece, shrinkage would result in any case, and the soft twist would be thrown up on to the surface, in the form of tiny curls or loops.

Class VI. Fault 8. *Hard Twist.*—Trappers which are too delicately balanced, may cause very serious faults. To understand the reason, it must be borne in mind that the speed of spindles always affects the drag. If it is desired that the trappers should rise on the breakage of one end of a $2/16^s$ thread, their adjustment need not be at all fine, the

difference in weight is considerable, and the trappers will rise quickly and stop the roller immediately one end breaks, although it will be held tightly down so long as both ends are intact, even if the speed of the spindle should alter considerably, on account of an imperfect drive; but if a $^2/70^s$ yarn be put into the same frame, the strain is so much reduced that if the speed of the frame alters ever so little, the drag becomes too light to keep the trapper down, so that it rises and stops the roller. If a roller is once stopped, it may continue standing until the twist is so hard that the yarn snaps, but as the twist increases, the drag also increases considerably, and it very often happens that the trapper is again dragged down, so that the roller starts again, and the yarn goes forward on to the bobbin. Under certain conditions as to size, with an irregular drive, this might be going on, on many spindles at the same time, each of them producing unequal lengths of yarn with a normal twist of, say, 20 turns, alternating with shorter lengths, which might contain as much as 40 or 50 turns per inch. On the bobbin these places are practically invisible, and in the warp they may run into snarls; but in the finished piece each hard place in the yarn will contain so much twist, that it can never swell in finishing, and will leave a mark as if an end were missing altogether.

This is a very serious fault which is not easy to detect, and it occurs in so many varieties that no one case can be stated as typical. For instance, a temporary slackening in the speed of the mill engine, for any reason, may cause every trapper to rise and stop the roller for a few seconds, but the trappers may be so balanced that they are all pulled down again, when the engine regains its normal speed. Such an

accident would cause a piece of hard twist on every bobbin, and unless twist frames are thrown off the moment the engine begins to slacken, at stopping time, the same result will happen. It would happen every time the frame stopped or started whilst the spindles were below the necessary speed; but every frame is, or should be, fitted with a contrivance, either automatic or otherwise, for holding the trappers down during this period of increasing or decreasing speed.

It is possible to have trappers so accurately balanced that the slightest increase in vibration causes them to rise and stop the roller momentarily, until the added twist gives increased drag, so that the trapper is again pulled down. This may go on indefinitely, and its natural consequence is a series of places containing a few extra turns of twist in every inch; they may be very regular, or very much the reverse; but in any case, the twist from the hard places will tend to run into those which are softer, and when long lengths are unwound at one time, as in warping, the twist will be averaged, and the piece will not appear as if the yarn were very uneven, but as if it were all twisted more than it should be.

Class VI. Fault 9.—*Soft Twist* is most easily caused in twisting, by neglect on the part of the hand, to loop the two ends round the roller, after they have been tied in. In this case, the amount of yarn which runs down in one minute, depends on the amount of drag on the yarn, due to spindle speed, and on the friction of the bobbins which contain the single yarn, on the pegs. Sometimes yards of yarn may go down, with not more than one or two turns per inch, whilst in other cases, the output will be jerky, and the twist irregular. The fault is serious because so much yarn is made in a

few seconds, but the faults are not so glaring as those caused by excessive twist.

Class VI. Fault 10. *Curly Yarn.*—When only one end is round the roller and the other running free, from the bobbin to the twizzle, there is so much difference of tension between the two strands of the folded yarn that the end which is round the roller, and has borne all the strain, is nearly straight, whilst the other end is wound round it corkscrew fashion; the amount to which this will show, depends on many circumstances; the fault may be very apparent or practically invisible, and the amount of damage it will cause in a piece depends entirely on circumstances.

Class VI. Fault 11.—*Hard twist* may also be made by the spindle moving whilst a knot is being tied. However quickly a girl may be able to tie good knots, she must hold the ends for an appreciable length of time, say five seconds, and if the spindle is not stopped, it will revolve about 500 times during the process, and each of the 20 in. between the cap and the knot would therefore receive about fifteen turns more than it ought to have, which would make a terribly hard place just before the knot. Of course no one ever allows piecings to be made in this way, the spindle is always stopped in some way or another; in many frames the twist tube whorle is made with a large flange, against which the girl can press her knee; but this is a very crude device, for the pressure is bound to alter as the lifter rises and falls, and it often happens in consequence that the spindle is rotating slowly for part of the time during which the knot is being tied. If the spindle rotates at all, it increases the twist in the yarn close to the knot, and it must be admitted that there is no commoner fault in twofold yarn than this. Wherever

careless hands are employed, it will occur more or less whenever an end breaks down, and as it always makes a knot show very badly in the piece, it usually proves an expensive item for the spinner.

Considering how very difficult it is for a girl to hold the spindle stationary the whole time she is tying the knot, it is curious that automatic or other devices to hold the spindle are so uncommon. Many of those on the market seem intrinsically expensive, but a good automatic brake or clutch is a great convenience to the girl, and a great safeguard against bad work to the spinner (see Chapter IX.).

Class VI. Fault 12. **Thick Yarn.**—If the ends from two adjacent rollers happen to touch one another, they are just as likely to run down together on to one of the spindles, as in the case of the equivalent spinning fault, and the results will be very similar. A fourfold yarn is formed, say $^{4}/16^{s}$, which contains the twist which would have been right for $^{2}/16^{s}$. A fourfold yarn would not require half the twist to give it equivalent strength and bulk, and consequently it is screwed up so hard, that it looks like whipcord. It will run for any length of time without breaking, but the excess twist makes it so compact, that it looks very little thicker than twofold when it is stretched on the warping mill. It is therefore liable to run along the whole length of a piece and cause very serious damages in consequence.

Class VI. Fault 13.—*Soft twist* may, of course, be caused by dry tubes, as in spinning (see Class V., Fault 9).

Class VII.—**Reeling**, or winding yarn from bobbins on to hanks, is such a simple process that nearly all the possible defects which occur in it, are due not to defects in the machines, but to carelessness on the part of the overlooker

or the minder, and they may therefore be dismissed very briefly.

Class VII. Fault 1. *Overweight.*—If the machine is so set that it winds more than 560 yards on to the hank before the bell rings or the machine knocks off, or if it is allowed to run one or two revolutions after the bell has rung, the spinner will lose every extra yard so added to the hanks, because all hank yarn is sold by calculation weight, and if the calculation weight is exceeded, it will certainly not be paid for.

In the same way, if yarn is spun too heavy, and full length is given, each bundle will weigh more than calculation weight, and the overweight will also be dead loss.

Class VII. Fault 2. *Short weight.*—On the other hand, if the yarn is correct in weight at standard condition, the hanks will be light if the machine gives short length for any reason, and in this case also the spinner is responsible. In other words, when a spinner accepts an order for yarn in bundle, he guarantees correct weight and correct counts; if he gives too much length or weight he cannot charge for it, but if there is too little length or weight he can be charged for the difference.

Class VII. Fault 3.—Neglect to tie in a new end immediately a bobbin runs out is a frequent cause of trouble, because short hanks naturally result.

Class VII. Fault 4.—Carelessness in tying knots is the most general cause of complaint against this process. Knots which slip when the yarn is being woven are the most fatal fault of all; but clumsy knots, or any kind of knot with long ends left hanging to them, are also likely to cause trouble, and for this reason the reeling overlooker should be very

careful to know that all his hands are competent to tie the best knot for each different class of trade.

Class VIII. Fault 1.—**Winding** yarn for warping, from twist bobbins on to warping bobbins, cones, barrels, or cheeses, has few faults except those caused by bad knotting; but as nothing causes more annoyance to a weaver than a warp in which knots slip and ends break down in consequence, every spinner should not only be sure that all his hands know which is the best knot to tie, and how it can be tied most quickly, but he should also take care that overlookers rigorously enforce instructions in this matter.

Class VIII. Fault 2.—One of the most inexplicable faults in the whole range of spinning is that caused by winding a bobbin twice over, or by any other means which causes the thread to lie on some bobbins, in the reverse direction to that of the bulk of the yarn. It is difficult to find terms to express the relation exactly, but if we use the term "point first" for yarn as it runs from the spinning frame on to the spool, it is obvious that at the twist frame, it is heel first, and on the warp bobbin, it is point first again: a second winding would make it heel first. This must never occur. If yarn is rewound once, it must be rewound twice, so that all yarn on warping bobbins is arranged exactly as it came from the spinning frame.

If by any ill chance a dozen bobbins should be rewound and warped near together, a stripe would occur right down any piece made from botany yarn which had a clear finish. There seems to be no possible reason why this should occur, for we know that weft lies with every alternate pick in a reversed direction. People who have not thought the matter out for themselves, are apt to imagine that when the direction

of the thread is reversed, the direction of the twist is reversed as well; but this, of course, is not the case (see Fig. 100). It is easy to see that several strands of left-twist yarn will all reflect the light in the same way when lying side by side, and that they will therefore appear to be slightly different in

Fig. 100.

quality or nature (see Fig. 101); but it is extremely difficult to formulate any theory to account for a similar appearance when the twist is all in one direction, because we know that the fibres in all threads are blended almost alternately heel and point first, and their scales must therefore reflect the light almost equally whichever end of the thread is towards the light.

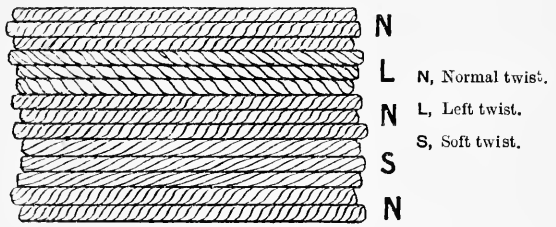

Fig. 101.

If a brushing back of the fibres by the guides of the preceding process has anything to do with the appearance, it is only natural to conclude that a second winding process would be just as efficacious as the first in this respect; but as it is clear that this is not the case, we are driven to the

conclusion that there is some arrangement of the fibre in the spinning process which no one yet clearly comprehends.

No reader must conclude that this list necessarily includes all the faults likely to be met with in the trade. They are only those with which the writer is personally acquainted in the spinning of fine botany and crossbred yarns. Combinations of faults from different processes will naturally obscure their double origin, and the continual wearing out parts of the machinery is always tending to make it incapable of perfect work. For this reason, faults are very seldom found to conform accurately to any rule, and the reasons for each fault have been given as fully as possible; because the reason is more likely to suggest remedies to a thinking mind, than is the tabulation, to clear up the difficulties of those who wish to use this chapter as a directory of remedies.

For ease of reference, the faults given in order of precedence are here tabulated in index form, and opposite to each fault is placed the class and fault number, which indicates the process under which it is likely to originate.

Nature of fault.	Class.	Faults.	Class.	Faults.	Class.	Faults.
Slubs	I.	1, 2, 3	II.	1, 2, 3	III.	6
Waste	III.	6	IV.	3		
Uneven Yarn . .	III.	7, 8	IV.	2, 4	V.	1, 2, 5
Curly Yarn . . .	V.	2, 3, 11	VI.	6, 10		
Thick Yarn . . .	V.	7	VI.	12		
Hard Twist . . .	V.	4, 8	VI.	6, 8, 11		
Soft Twist . . .	V.	8, 9	VI.	1, 2, 3, 5, 9, 13		
Weft Bars in pieces	V.	9, 13	VI.	4		
Warp Bars in pieces	VI.	8, 9	VIII.	2		

APPENDIXES

CONE DRAWING. APPENDIX A

Total draft $\frac{3\frac{1}{7} \times 2 \times 42}{60 \times \frac{3}{4}} \times \frac{3 \times 72 \times 80}{16 \times 22 \times 3\frac{1}{7} \times 3} = 7\frac{7}{11}$

Draft of fallers on back rollers $\frac{3 \times 72 \times 80}{16 \times 22 \times 3\frac{1}{7} \times 3} = \frac{630}{484}$

$$116 \times \frac{44 \times 41}{40 \times 80} \times 2 \times 3\tfrac{1}{7} = 411'' \text{ per min.}$$

Draft of front rollers on fallers $\frac{3\frac{1}{7} \times 2 \times 42}{60 \times \frac{3}{4}} = \frac{88}{15} \quad \therefore \quad \frac{630}{484} \times \frac{88}{15} = 7\frac{7}{11}$

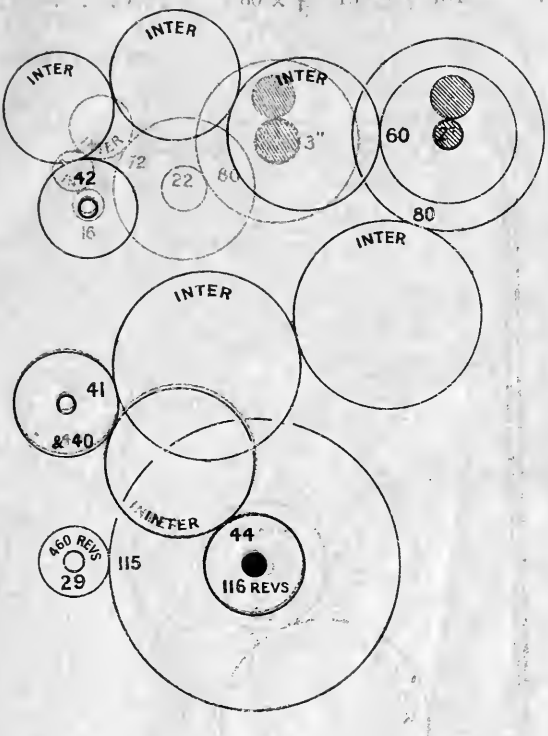

A. Fig. 1.

V. Fig. 1

CONE DRAWING. APPENDIX A

OUTPUT OF FRONT ROLLERS IN INCHES

$$116 \times \frac{40 \times 80}{44 \times 41} \times 5 \times 3\tfrac{1}{2} = 411'' \text{ per min.}$$

Total draft . . . . . $\frac{31 \times 2 \times 42}{60 \times \frac{3}{4}} \times \frac{\frac{3}{4} \times 72 \times 80}{16 \times 22 \times 31 \times 3} = 7\frac{7}{11}$

Draft of fallers on back rollers . . . . . $\frac{\frac{3}{4} \times 72 \times 80}{16 \times 22 \times 31 \times 3} = \frac{630}{484}$

Draft of front rollers on fallers . . . . . $\frac{31 \times 2 \times 42}{60 \times \frac{3}{4}} = \frac{88}{15} \therefore \frac{630}{484} \times \frac{88}{15} = 7\frac{7}{11}$

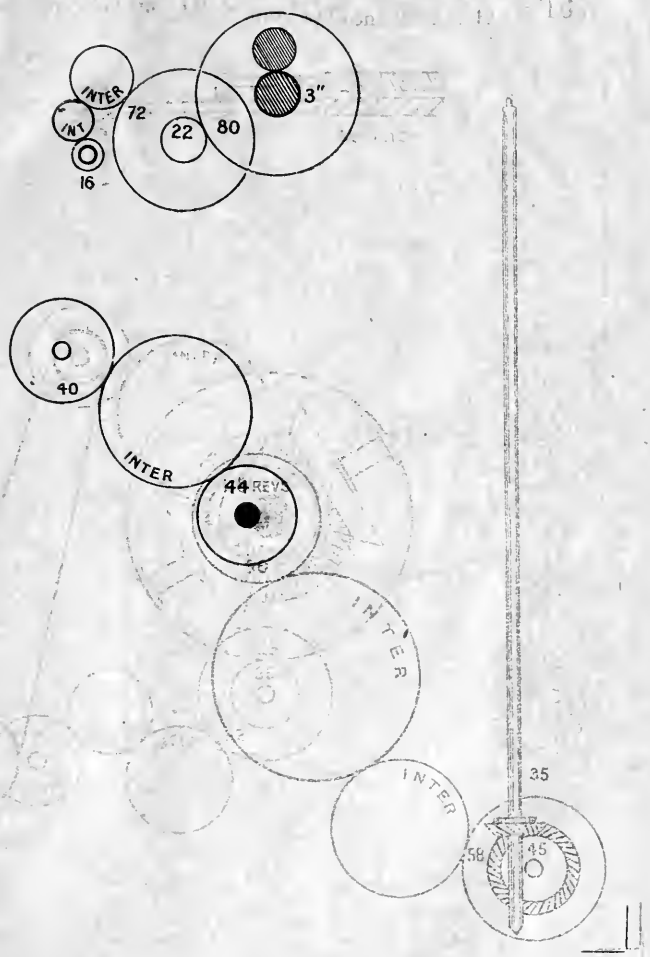

A. Fig. 2.

Fig. 23.

CONE DRAWING. APPENDIX A

SPEED OF DIFFERENTIAL GEAR

For a full bobbin . . $116 \times \frac{44 \times 4'' \text{ cone} \times 22 \times 36}{40 \times 6'' \text{ cone} \times 82 \times 125} = 6\frac{3}{5}$

For an empty bobbin $116 \times \frac{44 \times 6\frac{1}{4}'' \text{ cone} \times 22 \times 36}{40 \times 3\frac{1}{4}'' \text{ cone} \times 82 \times 125} = 16\frac{1}{2}$

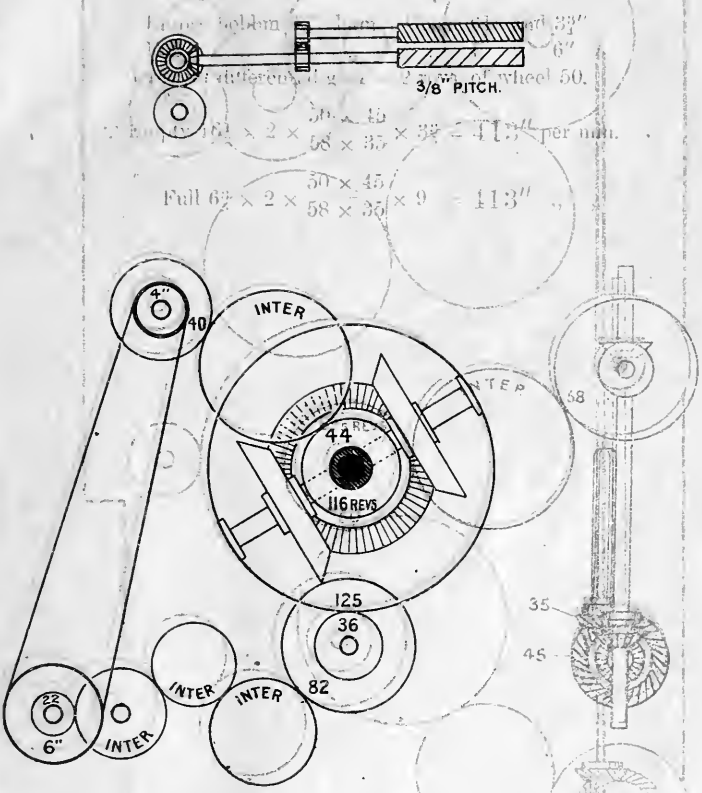

A. Fig. 4.

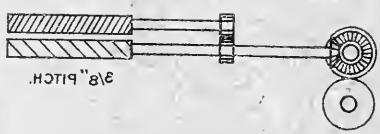
3/8" PITCH.

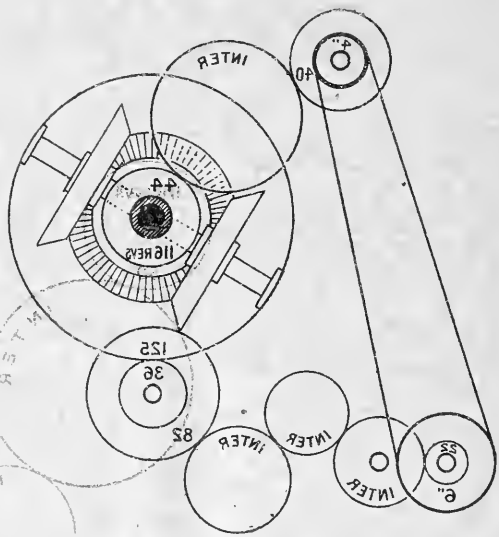
INTER
4"
40
44
116 REVS
125
36
82
INTER
INTER
INTER
22
6"

UPTAKE OF BOBBIN: *i.e.* SPEED OF BOBBIN SURFACE IN EXCESS OF SPINDLE SPEED

Empty bobbin $3\frac{3}{8}''$ diam. Cones $6\frac{1}{4}''$ and $3\frac{3}{4}''$
Full " $9''$ " " $4''$ " $6''$
1 rev. of differential gear = 2 revs. of wheel 50.

$$\therefore \text{Empty } 16\tfrac{1}{2} \times 2 \times \frac{50 \times 45}{58 \times 35} \times 3\tfrac{3}{8} = 413'' \text{ per min.}$$

$$\text{Full } 6\tfrac{3}{4} \times 2 \times \frac{50 \times 45}{58 \times 35} \times 9 = 413'' \text{ " "}$$

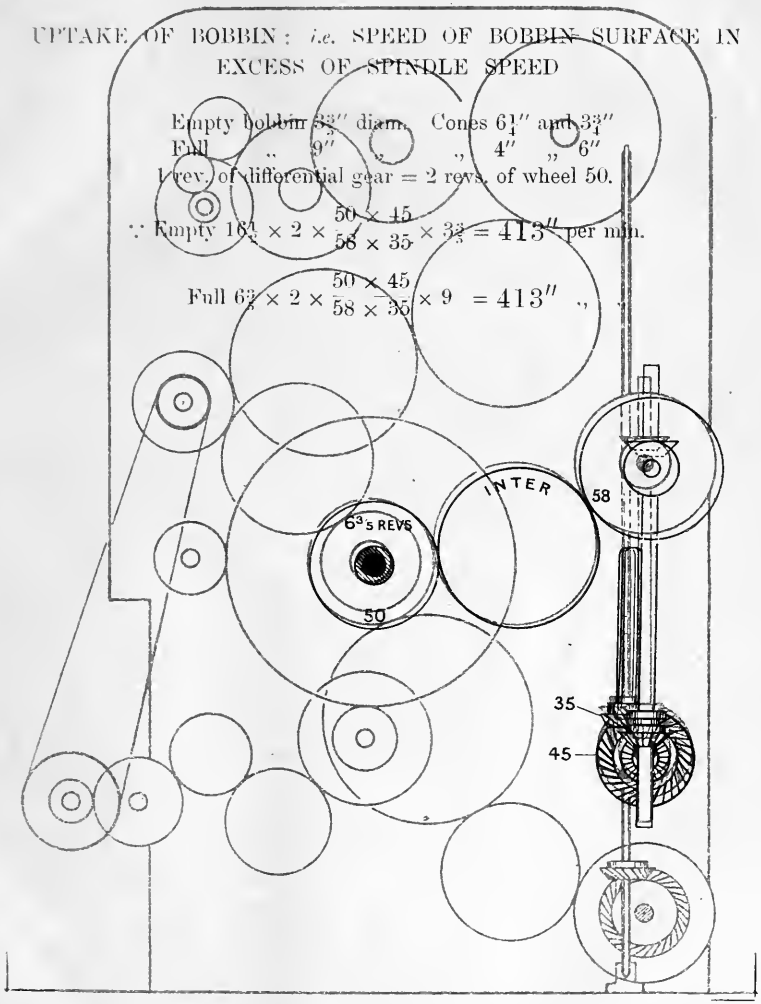

A. Fig. 65.

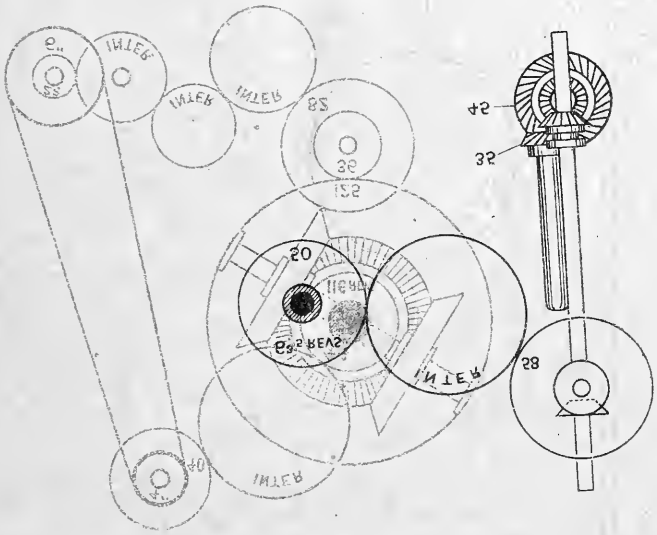

$$\text{Full } 6\tfrac{5}{8} \times 5 \times \frac{28 \times 32}{20 \times 42} \times 6 = 41\tfrac{3}{16} \text{ W.}$$

$$\text{Empty } 11\tfrac{1}{4} \times 5 \times \frac{28 \times 32}{20 \times 42} \times 3\tfrac{5}{8} = 41\tfrac{3}{16} \text{ W. per min.}$$

1 rev. of differential gear = 5 revs. of spool 20.

Full $6\frac{5}{8}$ diam. Coned to suit $5\frac{1}{8}$ diam. θ_1

Empty $11\frac{1}{4}$ diam. Coned to suit $3\frac{5}{8}$ diam. θ_2

EXCESS OF SPINDLE SPEED

TAPERAGE OF BOBBIN AND SPEED OF BOBBIN SURFACE IN

For an empty bobbin $\quad \frac{11 \times 11 \times \text{cone} \times 25 \times 152}{11 \times 11 \times \text{cone} \times 35 \times 30} = 6\frac{3}{8}$

For a full bobbin $\quad \frac{11 \times 10 \times \text{cone} \times 25 \times 152}{11 \times 10 \times \text{cone} \times 35 \times 30} = 6\frac{3}{8}$

CONE DRAWING. APPENDIX A

SPEED OF DIFFERENTIAL GEAR

CONE DRAWING. APPENDIX A

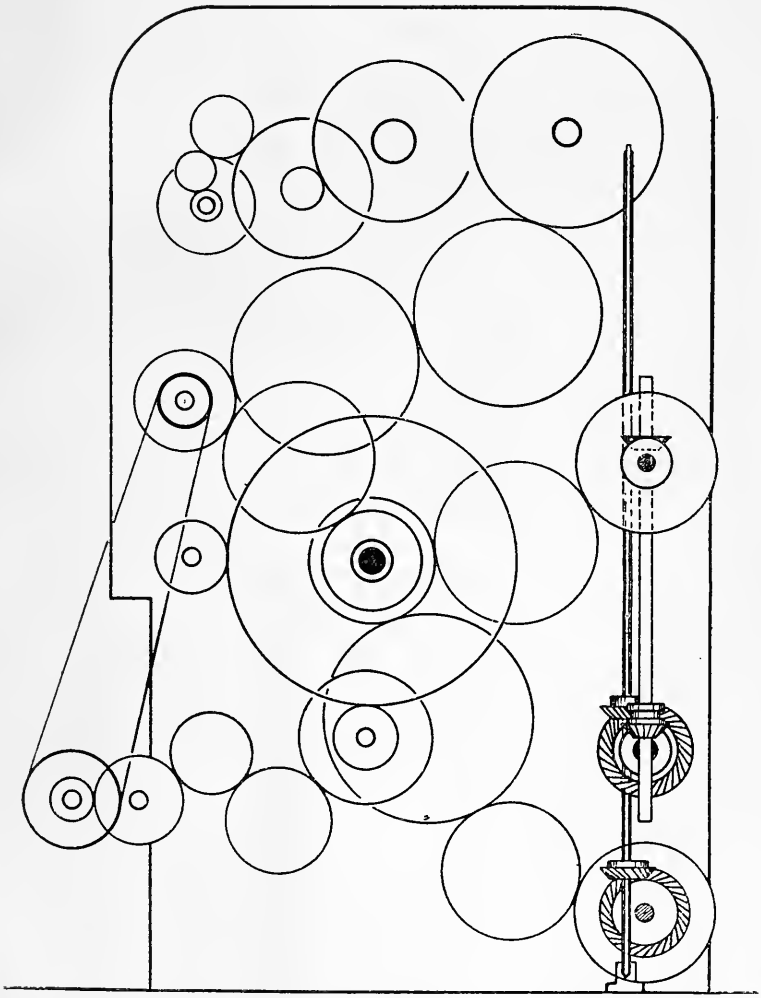

A. Fig. 6.

REVOLUTIONS AND OUTPUT OF 2½" FRONT ROLLER

$$300 \times \frac{42 \times 30 \times 48}{59 \times 51 \times 115} = 52\tfrac{1}{4} \text{ revs. per min.}$$

$$52\tfrac{1}{4} \times 2\tfrac{1}{2} \times 3\tfrac{1}{2} = 411'' \text{ per min.}$$

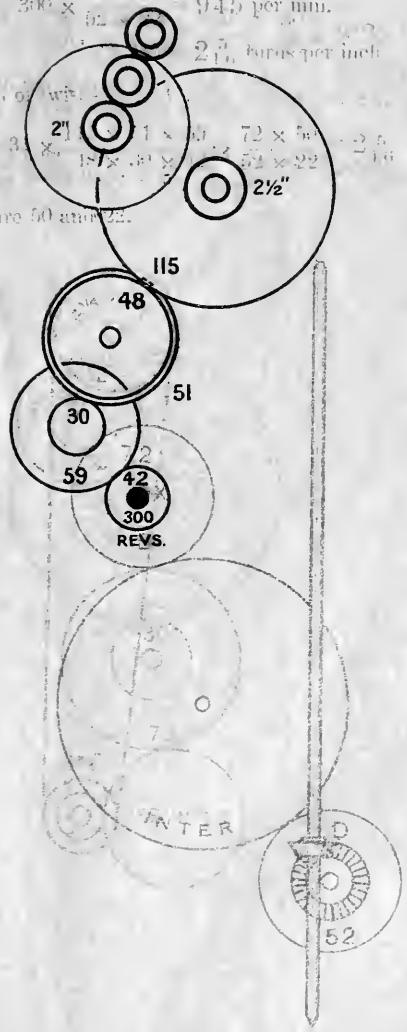

B. Fig. 1.

Revolutions of spindles— $\frac{300 \times 50 \times 21 \times 115}{42 \times 30 \times 48} = 521\frac{1}{4}$ revs. per min.

$521\frac{1}{4} \times \frac{21}{81} = 141''$ per min.

$300 \times \frac{52}{72} \times \frac{30}{25} = 945$ per min.

Direct calculation of twist— $\frac{945}{52 \times 25} = 2\frac{1}{6}$ turns per inch

Bevel wheels **D** are 50 and 72.

$21 \times 31 \times \frac{21 \times 81 \times 30}{48 \times 30 \times 42} \times \frac{50}{52} \times \frac{72}{25} = 2\frac{1}{6}$

B. B. Fig. 2

CONE ROVING. APPENDIX B

Speed of differential gear with belt on two equal diameters of cone (this gives a gauge point)—

$$300\,\frac{42 \times 30 \times 5'' \text{ cone} \times 21 \times 30}{59 \times 52 \times 5'' \text{ cone} \times 75 \times 125} = 8{\cdot}28$$

with upper cone $6\frac{1}{4}$ } $= \frac{6\frac{1}{4}}{3\frac{3}{4}} \times 8{\cdot}28 = 13{\cdot}8$
„ lower cone $3\frac{3}{4}$ }

with upper cone 4 } $= \frac{4}{6} \times 8{\cdot}28 = 5{\cdot}52$
„ lower cone 6 }

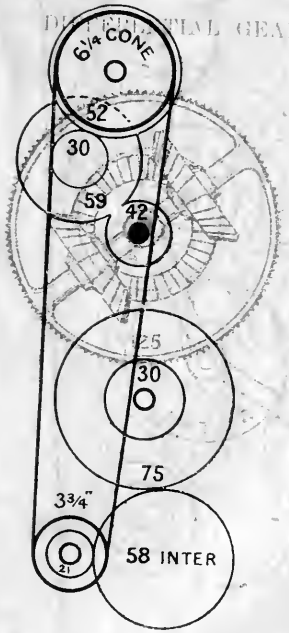

B2. Fig. 31.

B. Fig. 3.

CONE ROVING. APPENDIX B

UPTAKE OF BOBBIN: *i.e.* SPEED OF BOBBIN SURFACE IN EXCESS OF SPINDLE SPEED

Empty bobbin $4\frac{3}{4}$" circumference. Cones $6\frac{1}{4}$" and $3\frac{3}{4}$"
Full " $11\frac{7}{8}$" " " 4" " 6"

One revolution of differential gear = 2 revolutions of wheel A.

$\therefore$ Empty $15\cdot8 \times 2 \times \frac{72 \times 50}{52 \times 22} \times 4\frac{3}{4} = 412\cdot5''$ per min.

Full $5\cdot52 \times 2 \times \frac{72 \times 50}{52 \times 22} \times 11\frac{7}{8} = 412\cdot1''$ per min.

CONE ROVING. APPENDIX B

Bevel wheels C are 50 and 22.

DIFFERENTIAL GEAR

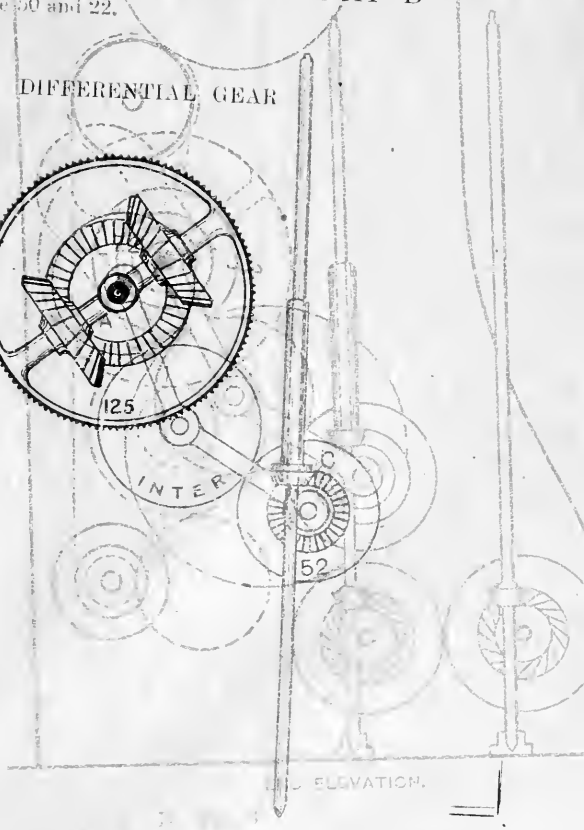

B. Fig. 5.
B. Fig. 4.

CONE ROVING. APPENDIX B

VARIATION OF BOBBIN &c. SPEED OF BOBBIN SURFACE IN EXCESS OF SPINDLE SPEED

Empty bobbin 4¾" circumference. Cones 6¼" and 3¾"
Full " 11½" " " 4" " 6"

One revolution of differential gear = 2 revolutions of wheel A.

Empty: $\frac{72}{52} \times 2 \times \frac{72}{52} \times \frac{50}{22} \times 4\frac{3}{4} = 412{\cdot}5$" per min.

Full: $\frac{72}{52} \times 2 \times \frac{72}{52} \times \frac{50}{22} \times 11\frac{1}{2} = 412{\cdot}1$" per min.

Bevel wheels C are 50 and 22.

B. Fig. 5.

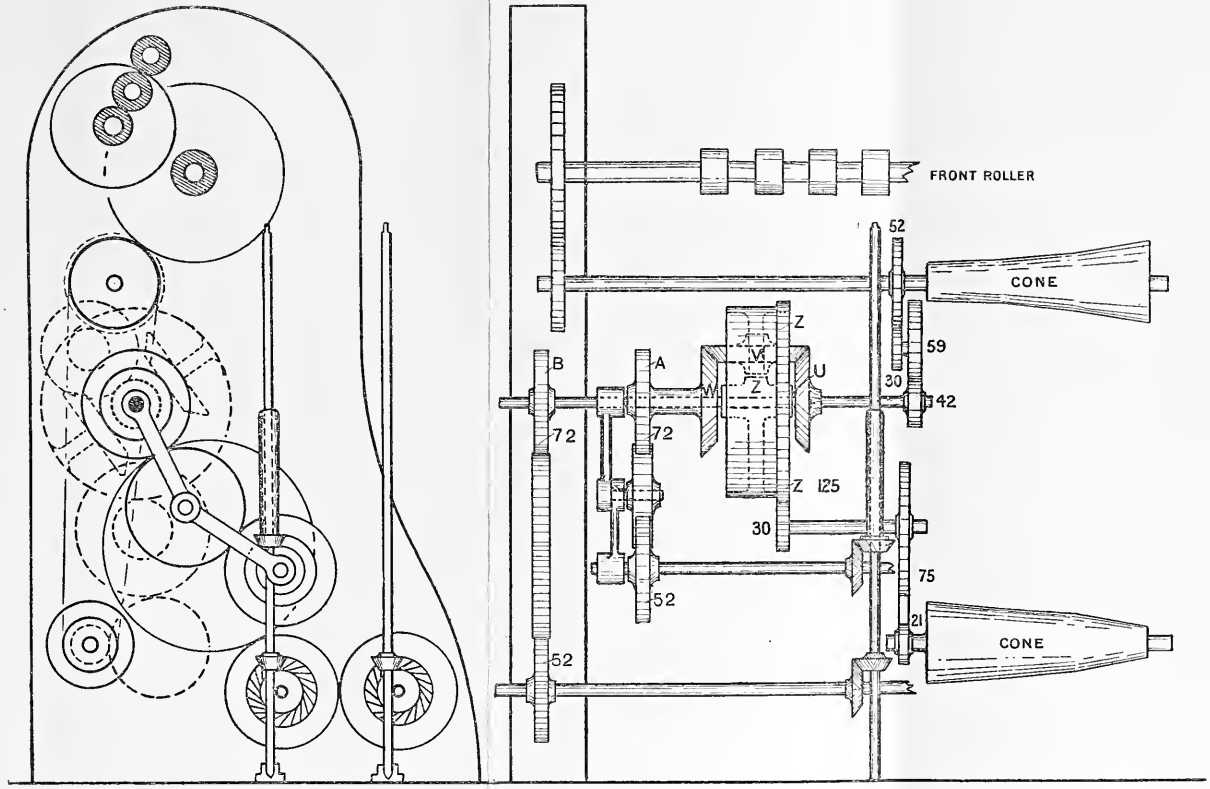

B. FIG. 6

CONE ROVING BOX.

APPENDIX C

YARNS FROM VARIOUS PROCESSES

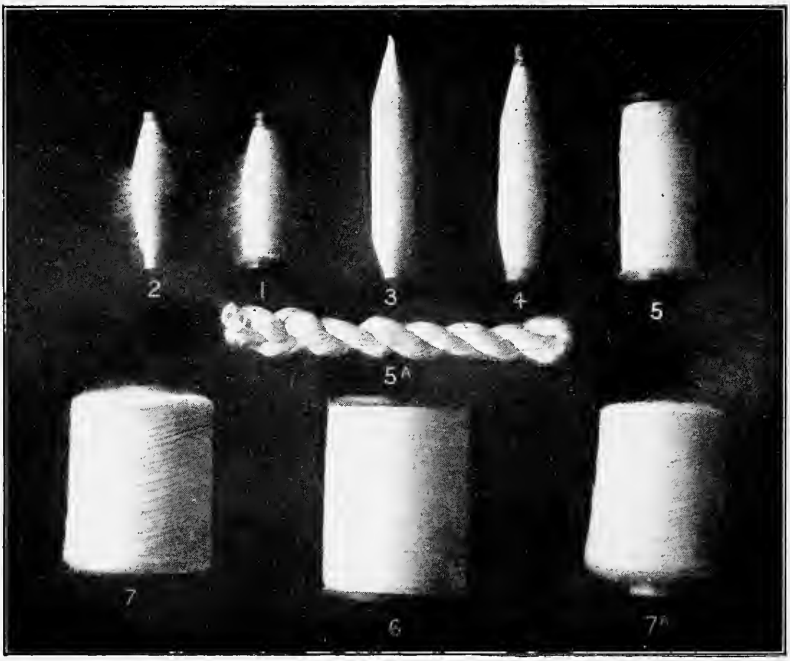

1. 5″ spool.
2. 5″ paper tube.
3. 7″ mule cop.
4. 7″ cop, two fold.
5. Twist bobbin.

5A. 1½ yd. hank, 560 yds.

6. Warp bobbin 5″ × 4½″.
7. Cross wound barrel.

7A. Cross wound cone.

APPENDIX C

SPINNING ROLLERS

1 2 3 4

1. Iron, double covered hard.
2. Wood, single covered hard.
3. Iron, soft covered, laced.
4. Wood, soft covered, nailed.

DRAWING ROLLERS

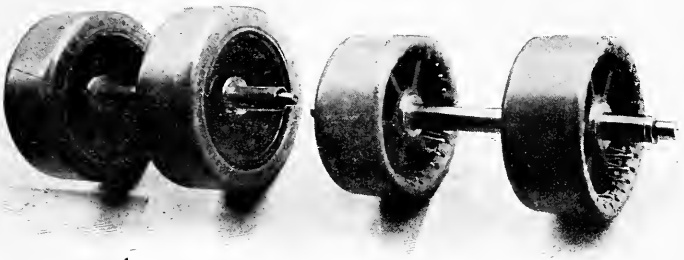

1 2

1. Wood, soft covered, nailed.
2. Iron, soft covered, laced.

INDEX

Average length, 44
Arkwright, 13, 23

Back rollers, 116, 173
Bad piecings, 270, 275
Ball warps, 245
Balancing, 129
Balloon, 57, 69
Barrels, 245, 252
Beaming, 245, 260, 262
Bell caps, 187
Bellassed rollers, 176, 274, 277–279
Bobbins, cap touched, 291
——, cracked, 292
——, old, 291
——, size, 145
——, speed of, 66, 182
——, drag, 65, 137
——, drive, 159
Botany, 36
Botany coating yarn, 37
Box of tricks, 152, 155
Breaks, spindle, 242, 243
Buenos Ayres, 42, 215

Can gill box, 113, 119, 124
Cap spindle, 18, 23, 70
—— —— vibration, 75, 290
——, shapes of, 187
——, touched bobbins, 291
Cape wool, 50
Carriers, 90, 174, 206
Carrier draft, 133, 206
Cashmere, 28, 33, 35
Calculations,
——, draft, 118, 122, 134, 142, 206
——, drawing, 118, 122, 134
——, spinning, 206
Calculations, twist, 122, 134, 142, 206
Cheeses, 245, 255. Appendix C
Coating yarn, 39
Cone drawing, 150. Appendix A
—— —— drag, 153 ,,
—— —— draft, 151 ,,
—— —— twist, 152 ,,
—— —— speeds, 152 ,,
Cone roving. Appendix B
—— —— flyer, 67
Cones, 152, 161, 165
Cracked bobbins, 292
Crank motions, 197, 198
Creel, 115
Crompton, 16, 23
Crossbred drawing, 111
Cross reeling, 247
Curly yarn, 297
Cut sliver, 271
Cut finish, 40

Dead spindle, 18, 23, 70
Demi, 51
Dereham, Haines, 11, 23
Diameter of fibres, 49
Differential motion, 158, 160
Distaff, 7, 23
Doffing, 147
Double draft, 96
Double ends, 285
Doublings, theory of, 106, 108, 111
Draft calculations, 83, 118, 122, 134, 136, 138, 142, 171, 173, 206
Drafting, 11, 23, 82, 112, 171
——, theory of, 85, 93, 136, 171
—— of cotton, 96
Drag of flyers, 137
—— of rings, 78

Drag of caps, 72
——, theory of, 66, 71, 72, 74
Drawing calculations, 98, 118, 122, 134
—— drafts, 272
—— faults, 272
——, twist in, 217
—— ratch, 272
Dry rollers, 280
—— spun yarn, 42, 208
—— tops, 210, 212
—— tubes, 289
Drum winder, 252, 253

Fallers, 88, 117
Faults, 302
Finishing box, 140
First drawing box, 130, 134
Fluted rollers, 116, 127, 172
Fluting, 116, 172
Front rollers, 121, 131, 133

Hard-covered rollers, 176
Hard twist, 282, 294, 297
Hargreaves, 16, 23
Heart-shaped cams, 196, 199
Henrietta cloth, 28
Highs, Thos., 13, 23
Hodgson's lifter, 189
Hogs, hoggetts, 47
Hosiery, 230
Humidity, 227

Italian yarn, 29, 32

Jenny, 15, 23

Knocker-off, 122, 128
Knots, 237, 240, 299

Laps, 284
Lea reeling, 247
Left twist, 291, 294
Length of fibre, 91
Levelling, 177
Lifter calculations, 134, 142, 206
Lifter motions, 148, 156, 157, 183, 188, 191
Licking of ends, 74
Low crossbred, 47
Lustre, 52

Mangle wheels, 149
Merino, 35
Metric counts, 100
—— tables, 100, 103, 104
Milled rollers, 172, 222
Mule, 16, 23, 54, 56, 221
—— rollers, 222
—— spindles, 42
—— spinning, 221

Nicked rollers, 281
Nip, 89, 92
——, position of, 62

Overweight, 299
Output of frames, 180
—— of rollers, 127, 175

Parallel motion, 157
Paul Louis, 12
Piecings, 144, 270, 275
Porcupines, 89, 220
Port Philip, 215
Positively driven rollers, 233
Pressing rollers, 131, 133, 176

Quality, 26
Quick traverse, 252, 255, 257

Raised finish, 40
Ratch, 88
Reducing boxes, 141, 144
Reeling, 246, 249, 250, 299
——, lea, 247
—— cross, 247
Relative bobbin-flyer speeds, 66, 182
Repairs, 177
Reversed yarn, 300
—— twist, 291, 293, 294
Ring spindles, 76
—— spinning, 23
Rings, drag of, 78
——, patent, 80
——, theory of, 77–81
Rollers, draft of, 54
——, drawing, 280
——, fluted, 116, 126, 127
——, output of, 127, 174
——, pressing, 131, 133, 176. Appendix C

Rollers, nicked, 281
——, size of, 141, 143, 222
Roving bobbins, 65
—— boxes, 142, 143, 144
—— guide, 170
—— faults, 276
—— traverse, 170
——, twist in, 145
——, uneven, 277
—— waste, 277, 284

Scaife's lifter, 191–195
Scratch fluting, 172
Screw gills, 18, 32
Second gill box, 124
—— drawing box, 139
Serge, 45
Serrations, 48
Short weight, 299
Silk warp cashmeres, 28
Slack bands, 286
Slubbing, 18, 140
Soft rollers, 176. Appendix C
—— twist, 286, 296, 298
South American, 42
Speed of spindles, 179
Spindle breaks, 241, 243
—— draft, 12, 15
—— drive, 146, 159, 201
——, gill box, 122, 124
——, position of, 62, 64
——, speed of, 142, 179
——, stop motion, 239
—— theories, 53
Spindles, Egyptian, 6
——, Grecian, 7
——, early English, 8, 23
Spinning faults, 278
—— frame particulars, 206
—— wheel, Hindu, 6, 54
—— ——, one thread, 9, 23
—— ——, Saxon, 10, 23, 54, 57
Spirals, 43, 297
Spools, build of, 184, 185
Super botany weft, 28
Swing frame, 154, 156

Tension pulleys, 203, 204
Theory and practice, 55
Thick yarn, 40, 298
Third drawing box, 139
Threefold twisters, 236
Top faults, 269
Tops, dry, 210, 212
Trap motions, 232, 234, 238
Travellers, 77
Tubes, dry, 289
——, worn, 290
Twist calculation, 122, 134, 142, 206
——, effect of, 50
—— frame rollers, 231, 233
——, hard, 282, 294, 297
——, left, 291–293, 294
——, soft, 286, 298
——, spinning, 205
——, theory of, 179
Twisting, 228
—— faults, 293

Warping bobbins, 215. Appendix C
—— mill, 259
——, sectional, 262, 264
Warps, 245, 258, 260
Washers, 137
Waste, 277, 284
Weight of tops, 99, 104, 106, 108, 111
—— roving, 99, 106, 108, 111
—— yarn, 100, 101
Winding, 250
—— drum, 252
—— faults, 300
—— on, 182
——, quick traverse, 255, 257
Worn tubes, 290
Woollen, 24
Worsted, 24

Undulations, 51

Yarn coating, 39
——, hard, 282, 294, 297
——, soft, 230, 286, 296, 298
——, thick, 40, 298

THE END

PRINTED BY
WILLIAM CLOWES AND SONS, LIMITED
LONDON AND BECCLES.

SOUTHEASTERN MASSACHUSETTS UNIVERSITY
TS1627.P8
Principles of worsted spinning
3 2922 00187 818 7

TS1627
P8